SHARP PARTS GUIDE

CODE:00ZAR200//P1/

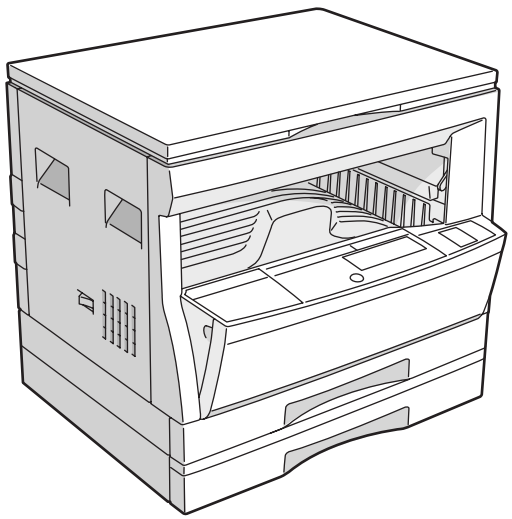

DIGITAL COPIER

MODEL **AR-S200** (Japan only)
AR-200 (Except Japan)

CONTENTS

1 Exteriors
2 Operation panel section
3 Side door unit
4 Optical unit
6 Middle frame unit
7 Process unit
8 DV cartridge unit
9 Fusing unit
10 Main drive unit
11 Base plate unit 1
12 Base plate unit 2
13 Manual paper feeding multi unit
14 Delivery frame unit
15 TC case unit
16 250 sheets tray unit
17 Packing material & Accessories
18 MCU PWB
19 COPY-Operation PWB
27 ERDH-Operation PWB
28 Delivery interface PWB
31 MHPS PWB
Index

The AR-200 is a successor to the AR-160/161 in which changes are made in some of mechanisms. Referance should also be made to the AR-160/161 Parts Guide for servicing of the AR-200.

SHARP CORPORATION

This document has been published to be used for after sales service only.
The contents are subject to change without notice.

DEFINITION

The definition of each Rank is as follows and also noted in the list

A : Parts necessary to be stocked as High usage parts.

B : Parts necessary to be stocked as Standard usage parts.

C : Low usage parts.

D : Parts necessary for refurbish.

E : Unit parts recommended to be stocked for efficient after sales service.
Please note that the lead time for the said parts may be longer than normal parts.

S : Consumable parts.

Please note that the following parts used in Copier under the same description are classified into A or B Rank depending upon the place used.

Example: Gear made of Metal, Sprocket, Bearing, Belt made of Rubber, Spring clutch mechanism.

A Rank : The parts which may be with the revolution or loading.

B Rank : Parts similar to A Rank parts, but are not included in Rank A.

Because parts marked with "⚠" is indispensable for the machine safety maintenance and operation, it must be replaced with the parts specific to the product specification.

○

○ Other than this Parts Guide, please refer to documents Service Manual of this model.

○ Please use the 13 digit code described in the right hand corner of front cover of the document, when you pleace an order.

○ For U.S. only-Use order codes provided in advertising literature. Do not order from parts department.

1 Exteriors

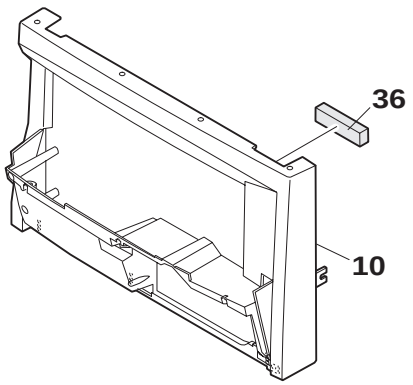

3 Side door unit

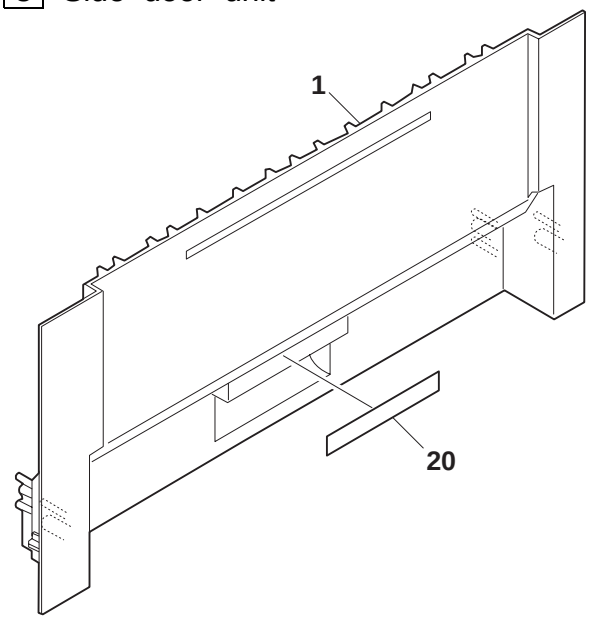

4 Optical unit

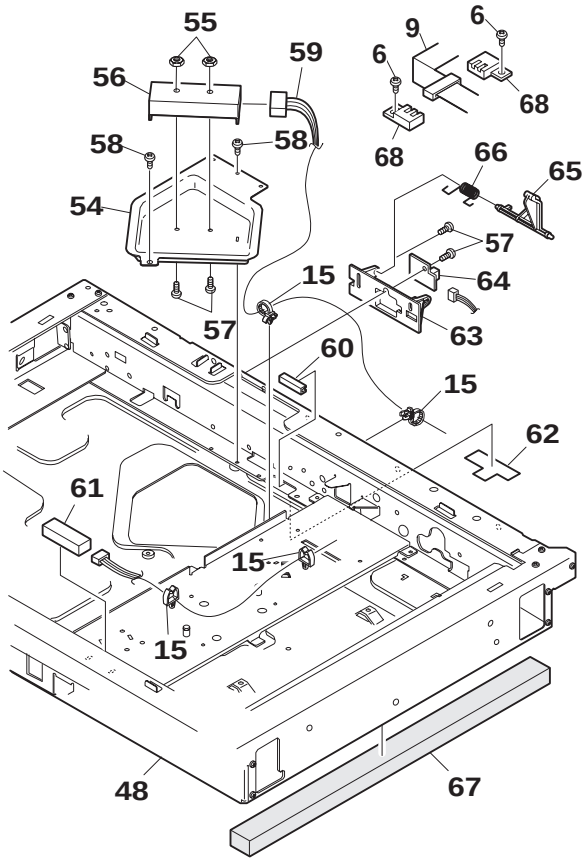

6 Middle frame unit

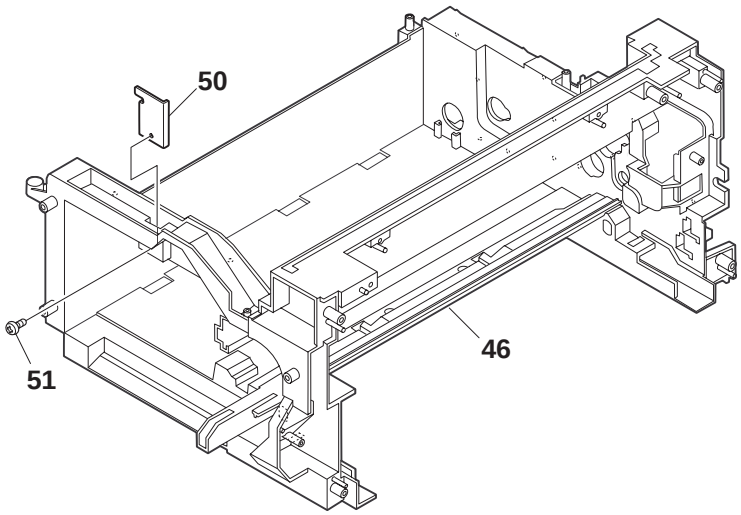

9 Fusing unit

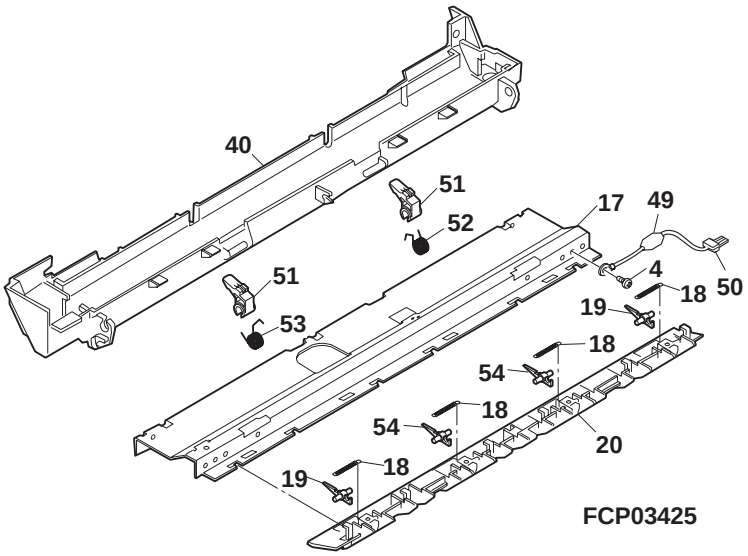

11 Base plate unit 1

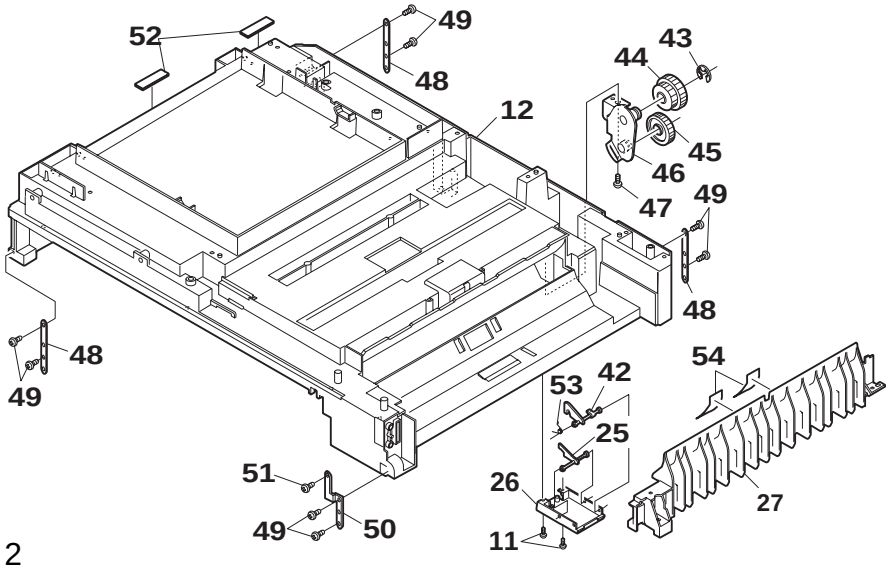

12 Base plate unit 2

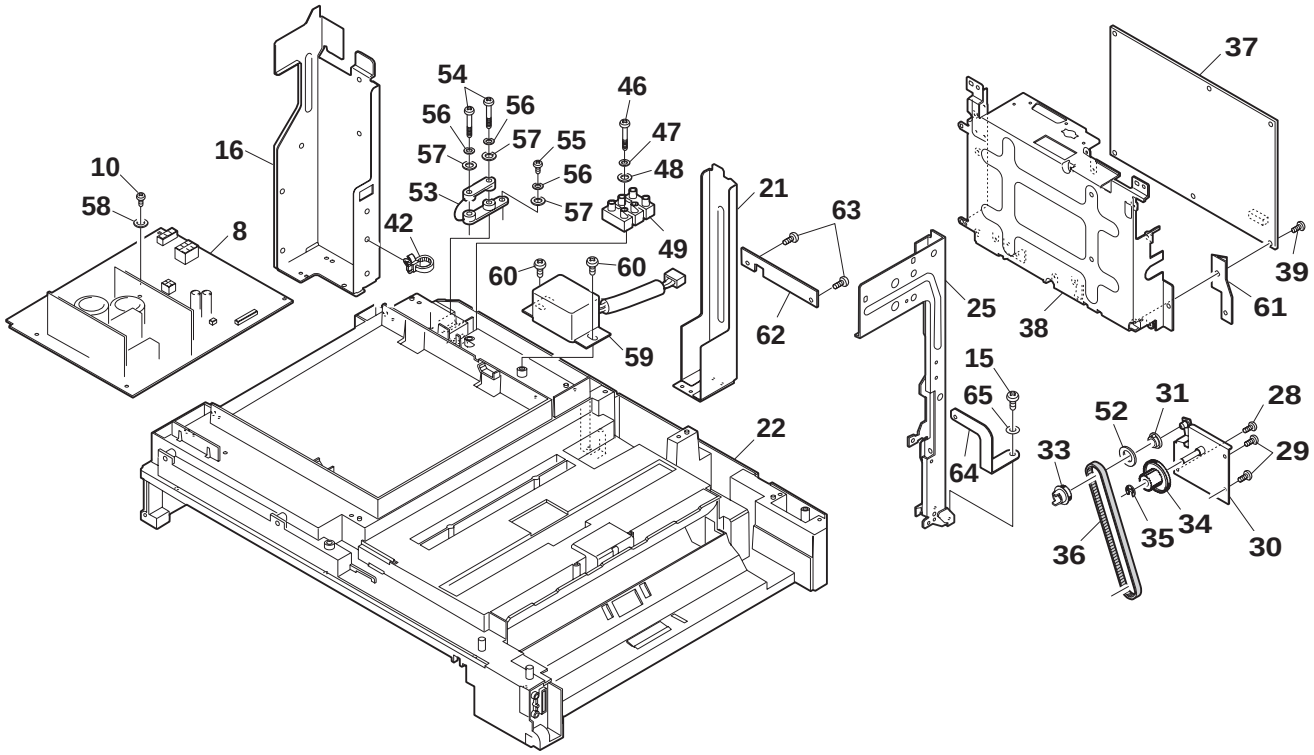

15 TC case unit

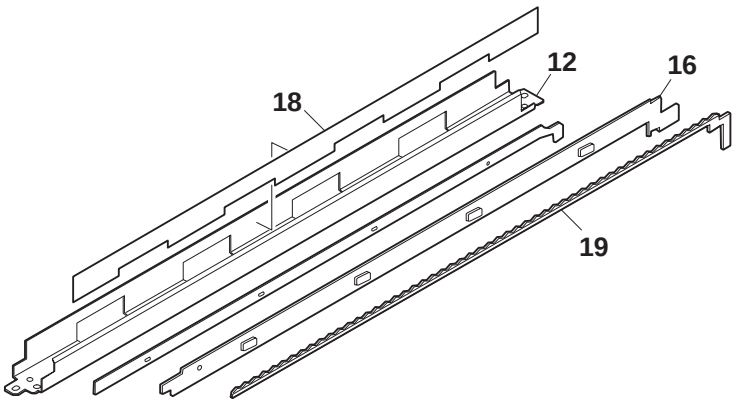

FCP03426

1 Exteriors

NO.	PARTS CODE	PRICE RANK Ex.	PRICE RANK Ja.	NEW MARK	PART RANK	DESCRIPTION
1	GCŌVH0010QSZZ	BE	GN		D	OC cover (Japan only)
2	PSHEZ0058QSZZ	AY	FQ		C	OC sheet (Japan only)
3	CHNG-0007QS01	AM	EG		C	OC hinge (Japan only)
4	XEBSE40P10000	AA	DD		C	Screw (4×10)(Japan only)
7	CFiX-0008QS01	AR	EQ		C	Glass fixing plate (Japan only)
	CFiX-0008QS02	AQ	EQ		C	Glass fixing plate (Except Japan)
10	CCAB-0012QS07	BD	GJ	N	D	Front exterior (Japan only)
	CCAB-0012QS08	BC	GJ	N	D	Front exterior (USA only)
	CCAB-0012QS16	BD	GJ	N	D	Front exterior (For Europe,CANADA)
11	CFTA-0001QS01	AX	FG	N	D	Front exterior cover (USA only)
	GFTA-0001QSZZ	AW	FG		D	Front exterior cover (Except USA)
15	GCAB-0014QSZZ	AY	FQ		D	Left exterior
18	GCAB-0013QSZZ	BC	GD		D	Rear exterior
22	GCŌVH0011QSZZ	AP	EQ		D	OC glass fixing cover
23	GCAB-0015QSZZ	AV	FG		D	Right exterior
36	PMLT-0030QSZZ	AD	DJ	N	C	Optical cushion B
501	CCŌVH0010QS51	BM	HV		E	OC cover unit (Japan only)
502	CFiX-0008QS51	BF	GN		E	Table unit (Japan only)
	CFiX-0008QS52	BF	GN		E	Table unit (Except Japan)

2 Operation panel section

NO.	PARTS CODE	PRICE RANK Ex.	PRICE RANK Ja.	NEW MARK	PART RANK	DESCRIPTION
3	HPNLH0004QS10	AV	FG	N	D	Main Dec. panel (Japan only)
	HPNLH0004QS11	AV	FG	N	D	Main Dec. panel (USA)
	HPNLH0004QS12	AV	FG	N	D	Main Dec. panel (CANADA)
	HPNLH0004QS13	AV	FG	N	D	Main Dec. panel (For Europe‥
	HPNLH0004QS14	AV	FG	N	D	Main Dec. panel (U.Kingdom)
5	GCAB-0017QSZZ	AV	FG		D	Operation panel exterior
19	CPWBN0024QS53	BP	LP	N	E	COPY-operation PWB (Japan only)
	CPWBN0024QS54	BQ	LP	N	E	COPY-operation PWB (Except Japan)

3 Side door unit

NO.	PARTS CODE	PRICE RANK Ex.	PRICE RANK Ja.	NEW MARK	PART RANK	DESCRIPTION
1	GDŌR-0001QSZZ	AW	FG		D	Right door
10	LFRM-0016QSZ1	AT	EZ	N	C	Right door inner
13	MSPRC0084QSZ1	AD	DJ	N	C	BC interface electrode spring
14	MSPRC0083QSZ1	AD	DJ	N	C	TC interface electrode spring
15	LHLDZ0033QSZ1	AF	DS	N	C	TC terminal interfase holder
20	TLABH0124QSZZ	AC	DJ	N	C	Green label

4 Optical unit

NO.	PARTS CODE	PRICE RANK Ex.	PRICE RANK Ja.	NEW MARK	PART RANK	DESCRIPTION
48	CDAiU0012QS02	BL	HR	N	C	Optical base plate
54	LPLTM0085QSZZ	AK	DX	N	C	Sensor fixing plate (AB series)
	LPLTM0119QSZZ	AK	DX	N	C	Sensor fixing plate (Inch series)
55	XNESD30-24000	AA	DD		C	Nut
56	VHPGP2D07//-1	BA	FX	N	B	Photo sensor (GP2D07)(AB series)
	VHPGP2D03//-1	BA	FX	N	B	Photo sensor (GP2D03)(Inch series)
57	XBBSD30P08000	AA	DD		C	Screw (3×8)
58	XHBSD30P06000	AA	DD		C	Screw (3×6)
59	DHAi-0103QSZZ	AM	EG	N	C	Paper size sensor harness (AB series)
	DHAi-0102QSZZ	AL	EB	N	C	Paper size sensor harness (Inch series)
60	LBSHZ0227FCZZ	AC	DD		C	Bushing
61	VHPGP2D061/-1	AY	FQ	N	B	Photo sensor (GP2D061)(AB series)
	VHPGP2D032/-1	BA	FX	N	B	Photo sensor (GP2D032)(Inch series)
62	PSHEP0092QSZZ	AC	DJ	N	C	Edge protection sheet
63	LPLTP0077QSZZ	AE	DJ	N	C	Open the shut sensor fixing plate
64	CPWBF1177FC69	AU	FG	N	E	MHPS PWB
65	MLEVP0031QSZZ	AE	DJ	N	C	Open the shut actuator B
66	MSPRD0119QSZZ	AC	DJ	N	C	Return spring A
67	PMLT-0029QSZZ	AG	DX	N	C	Optical cushion A
68	LHLDZ7021XCZZ	AD	DJ		C	Holder (FRH-12)

6 Middle frame unit

NO.	PARTS CODE	PRICE RANK Ex.	PRICE RANK Ja.	NEW MARK	PART RANK	DESCRIPTION
26	MSPRC0105QSZ1	AB	DJ	N	C	PS pressure spring
50	LANGT0003QSZZ	AD	DJ	N	C	SRU fixing angle
51	XHBS230P06000	AA	DD		C	Screw (3×6)

7 Process unit

NO.	PARTS CODE	PRICE RANK Ex.	PRICE RANK Ja.	NEW MARK	PART RANK	DESCRIPTION
10	XBBSD30P04000	AA	DD		C	Screw (3×4)
11	LPLTM0101QSZ1	AD	DJ	N	C	Sub blade earth plate
31	LFiX-0007QSZ1	AE	DJ		C	Drum fixing plate B

8 DV cartridge unit

NO.	PARTS CODE	PRICE RANK Ex.	PRICE RANK Ja.	NEW MARK	PART RANK	DESCRIPTION
31	PSHEA0004YSZ1	AC	DJ	N	C	DV side sheet

9 Fusing unit

NO.	PARTS CODE	PRICE RANK Ex.	PRICE RANK Ja.	NEW MARK	PART RANK	DESCRIPTION
8	NBRGP0567FCZZ	AG	DX		C	Fusing bearing
19	PTME-0007GCZA	AG	DS		C	Separator pawl (Japan only)
	PTME-0020GCZZ	AG	DX		C	Upper separator pawl (Except Japan)
24	PSHEP0053QSZ3	AK	DX	N	C	PG sheet
25	PGiDH0033QSZ1	AK	EB	N	C	Fusing front paper guide
27	NRŌLR0031QSZ1	BC	GJ	N	C	Pressure roller
32	MSPRT0089QSZ1	AC	DJ	N	C	Pressure spring B
34	MLEVP0019QSZ1	AE	DJ	N	C	Release lever F
35	MLEVP0020QSZ1	AE	DJ	N	C	Release lever R
49	VRH-ST2HB157K	AD	DJ		C	Resistor (1/2W 150Ω)
50	PBRSR0004QSZZ	AE	DS		B	Discharge brush
51	PTME-0014QSZZ	AK	DX	N	B	Lower separator pawl
52	MSPRD0122QSZZ	AB	DJ	N	C	Separator pawl spring R
53	MSPRD0121QSZZ	AB	DJ	N	C	Separator pawl spring F
54	PTME-0020GCZZ	AG	DX		C	Upper separator pawl

10 Main drive unit

NO.	PARTS CODE	PRICE RANK Ex.	PRICE RANK Ja.	NEW MARK	PART RANK	DESCRIPTION
18	CPLTM0047QS02	BA	FX	N	C	Main drive unit

11 Base plate unit 1

NO.	PARTS CODE	PRICE RANK Ex.	PRICE RANK Ja.	NEW MARK	PART RANK	DESCRIPTION
10	LPLTM0066QSZ1	AF	DS	N	C	Tray earth plate
23	PSHEZ0133QSZZ	AD	DJ	N	C	Paper feeding sheet
27	LRALP0005QSZZ	AN	EQ		C	Base plate rail R
37	PCŌVP0032QSZ1	AD	DJ	N	C	PS sensor cover
38	MSPRC0099QSZ1	AC	DJ	N	C	PS actuator spring
43	XRESP70-08000	AA	DD		C	E type ring
44	NGERH0078QSZZ	AE	DJ		C	2ND joint gear (39/33T)
45	NGERH1169FCZZ	AF	DS		C	2ND joint gear
46	CPLTM0114QS01	AG	DX		C	2ND joint gear fixing plate
47	XEBSE40P12000	AA	DD		C	Screw (4×12)
48	LPLTM0112QSZZ	AE	DJ		C	2ND support plate
49	XEBSE40P14000	AA	DD		C	Screw (4×14)
50	LPLTM0136QSZZ	AD	DJ	N	C	2ND support plate
51	LX-BZ0018QSZZ	AB	DD	N	C	Screw (3×6)
52	LPLTM0125QSZZ	AD	DJ	N	C	Plate
53	MSPRD0148QSZZ	AB	DJ	N	C	MF sensor spring
54	PSHEZ0134QSZZ	AC	DJ	N	C	PS front sheet

12 Base plate unit 2

NO.	PARTS CODE	PRICE RANK Ex.	PRICE RANK Ja.	NEW MARK	PART RANK	DESCRIPTION
1	GCOVH0014QSZZ	AR	EQ		C	Delivery left cover
2	GCOVH0012QSZZ	AS	EQ		C	Delivery rear cover
3	LSOU-0013QSZZ	BB	FX		D	Delivery tray
12	LPLTM0082QSZ1	AS	EQ	N	C	PS PWB fixing plate
28	XHBSD30P10000	AA	DD		C	Screw (3×10)
29	XHBSD30P08000	AA	DD		C	Screw (3×8)
37	CPWBX0021QS56	CD	UD	N	E	MCU PWB
42	LBNDJ0043FCZ1	AA	DJ		C	Snap band (Japan only)
52	LPFTF0001QSZZ	AC	DJ	N	C	Pulley flange
53	LFiX-0084FCZZ	AC	DD		C	AC cord fixer (120V)
	LFiX-0016FCZZ	AD	DJ		C	AC cord fixer (Except 120V)
54	XEPSD40P30000	AA	DD		C	Screw (4×30)
55	XEBSD40P12000	AA	DD		C	Screw (4×12)
56	XWSSD40-10000	AA	DD		C	Washer
57	XWHSD40-08100	AA	DD		C	Washer
58	LX-WZ0144FCZZ	AA	DD		C	Fusing washer
59	RCiLZ0006QSZZ	BE	GN	N	B	Coil (200V series)
60	XEBSD40P12000	AA	DD		C	Screw (4×12)(200V series)
61	PSHEZ0136QSZZ	AC	DJ	N	C	Motor plate sheet
62	LPLTM0134QSZZ	AD	DJ	N	C	Corner frame earth plate
63	XHBSE30P08000	AA	DD		C	Screw (3×6)
64	PSHEZ0135QSZZ	AC	DJ	N	C	Drive plate sheet
65	XWHSD40-08100	AA	DD		C	Washer

13 Manual paper feeding multi unit

NO.	PARTS CODE	PRICE RANK Ex.	PRICE RANK Ja.	NEW MARK	PART RANK	DESCRIPTION
1	PCOVP0030QSZZ	AN	EG		C	Multi frame cover
33	LFRM-0020QSZZ	AV	FG		C	Multi feed frame
501	CFRM-0020QS51	BK	HG		E	Manual paper feeding multi unit

14 Delivery frame unit

NO.	PARTS CODE	PRICE RANK Ex.	PRICE RANK Ja.	NEW MARK	PART RANK	DESCRIPTION
2	GCOVH0018QSZZ	AQ	EQ		C	Delivery front side cover
3	CPWBF0018QS52	AY	FQ		E	Delivery interface PWB
6	NROLM0037QSZZ	AR	EQ		C	Delivery roller C
15	NBRGY2122SCZZ	AB	DD		B	Transport roller bearing 1
50	XEBSD30P08000	AA	DD		C	Screw (3×8)
51	CSFTZ0023QS01	AH	DX		C	Shifter shaft
52	MSPRD0144QSZZ	AC	DJ		C	Delivery earth spring B
53	XRESP40-06000	AA	DD		C	E type ring
54	LSTPP0003QSZZ	AE	DJ		C	Shifter stopper
55	MSPRT0107QSZZ	AC	DJ		C	Shifter return spring
56	NGERH0067QSZZ	AD	DJ		C	Shifter gear (24T)
57	NGERH0068QSZZ	AD	DJ		C	Shifter gear (50T)
58	CPLTM0075QS01	AL	EB		C	Shifter drive plate
59	RMOTP0018QSZZ	AV	FG		B	Shifter motor
60	XHBSF30P05000	AA	DD		C	Screw (3×5)
61	CPWBF1177FC68	AP	EQ		E	Shifter HP sensor PWB
62	XRESP30-06000	AA	DD		C	E type ring

15 TC case unit

NO.	PARTS CODE	PRICE RANK Ex.	PRICE RANK Ja.	NEW MARK	PART RANK	DESCRIPTION
18	PSHEZ0129QSZZ	AG	DX	N	C	TC case sheet
19	PSHEZ0125QSZZ	AE	DS	N	C	Discharge plate sheet

16 250 sheets tray unit

NO.	PARTS CODE	PRICE RANK Ex.	PRICE RANK Ja.	NEW MARK	PART RANK	DESCRIPTION
1	LPLTM0053QSZ1	AS	EQ	N	C	Rotation plate
4	LPLTM2642FCGZ	AD	DS		C	Tray rear plate
15	MSPRC0152QSZZ	AB	DJ	N	C	Tray drower lower spring D

17 Packing material & Accessories

NO.	PARTS CODE	PRICE RANK Ex.	PRICE RANK Ja.	NEW MARK	PART RANK	DESCRIPTION
1	SPAKC0136QSZZ	AZ	FQ	N	D	Packing case (Japan only)
	SPAKC0112QS14	AZ	FQ	N	D	Packing case (USA)
	SPAKC0146QSZZ	AZ	FQ	N	D	Packing case (For Europe except U.Kingdom)
	SPAKC0112QS12	AZ	FQ	N	D	Packing case (CANADA,U.Kingdom,Others)
4	SPAKA0110QSZZ	AZ	FQ	N	D	Top packing cushion (Except Japan)
7	SPAKA0134QSZZ	AE	DJ		D	OC protection sheet (Japan only)
13	TLABH0116QSZZ	AN	EG	N	C	Size display label (Japan only)
	TLABH0065QSZZ	AN	EG		C	Size display label (AB series)
	TLABH0069QSZZ	AN	EG		C	Size display label (Inch series)
14	SPAKA0138QSZZ	AG	DX	N	D	Spacer B (Japan only)
18	TiNSJ0124QSZZ	AX	ZZ	N	D	Operation manual (Japanese) (Japan)
	TiNSE0125QSZZ	AQ	EQ	N	D	Operation manual (USA)
	TiNSE0173QSZZ	——	——	N	D	Operation manual (U.Kingdom)
	TiNSE0126QSZZ	——	——	N	D	Operation manual (English) (CANADA,Germany,U.Kingdom)
	TiNSF0127QSZZ	——	——	N	D	Operation manual (French) (CANADA)
	TiNSG0128QSZZ	——	——	N	D	Operation manual (German) (Germany)
	TiNSS0129QSZZ	——	——	N	D	Operation manual (Spanish)
	TiNSi0130QSZZ	——	——	N	D	Operation manual (Italian)
	TiNSZ0131QSZZ	——	——	N	D	Operation manual (Swedish)
	TiNSZ0132QSZZ	——	——	N	D	Operation manual (Dutch)
103	CCASZ0067FC02	AM	EG		D	Mentenance card (Japan only)
104	TCADS0764FCZZ	AE	DJ		D	Warranty resist card (U.Kingdom)
105	SPAKA0167QSZZ	AD	DJ	N	D	Tray protection sheet

18 MCU PWB

NO.	PARTS CODE	PRICE RANK Ex.	PRICE RANK Ja.	NEW MARK	PART RANK	DESCRIPTION
80	VHiW24257A12J	AN	EG		B	IC (W24257A12J) [IC18,19,21,22,35,37]
81	VHi29F400BCC1	BA	FX	N	B	IC (29F400BCC1) [IC20]
114	VHiSC65165V6T	BW	RR		B	16MDRAM (SC65165V6T) [IC36]
115	VHi16163CLT-6	BA	FX		B	64MDRAM (16163CLT-6) [IC34]
	(Unit)					
901	CPWBX0021QS56	CD	UD	N	E	MCU PWB

19 COPY-Operation PWB

NO.	PARTS CODE	PRICE RANK Ex.	PRICE RANK Ja.	NEW MARK	PART RANK	DESCRIPTION
20	VHPMPG3864K-J	AC	DJ		B	LED (Green) (MPG3864K)(Except Japan) [D1~4,6,7,10,11,12,14,15,16,18~24]
	VHPMPG3864K-J	AC	DJ		B	LED (Green) (MPG3864K)(Except Japan) [D26~33,35,36,37,39,40,41,43,44,46~50,52]
	VHPMPG3864K-J	AC	DJ		B	LED (Green) (MPG3864K)(Japan only) [D1~4,6,7,10,11,12,14,15,16,18~20,22,23,24]
	VHPMPG3864K-J	AC	DJ		B	LED (Green) (MPG3864K)(Japan only) [D26~32,35,36,37,39,40,41,43,44,46~50,52]
28	VRS-TP2BD6R8J	AA	DD		C	Resistor (1/8W 6.8Ω ±5%) [R2~7]
	(Unit)					
901	CPWBN0024QS53	BP	LP	N	E	COPY-Operation PWB (Japan only)
	CPWBN0024QS54	BQ	LP	N	E	COPY-Operation PWB (Except Japan)

27 ERDH-Operation PWB

NO.	PARTS CODE	PRICE RANK Ex.	PRICE RANK Ja.	NEW MARK	PART RANK	DESCRIPTION
2	QCNCW0022QSZZ	AE	DJ		C	Connector (52793-1590) [CN1]

28 Delivery interface PWB

NO.	PARTS CODE	PRICE RANK Ex.	PRICE RANK Ja.	NEW MARK	PART RANK	DESCRIPTION	
2	QCNCM2401SC0F	AB	DJ		C	Connector (6pin)	[CN3]
3	QCNCM7014SC0C	AA	DD		C	Connector (3pin)	[CN4]
8	VHiSTA401A/-1	AP	EQ		B	IC (STA401A)	[IC1,2]
10	VHViCPN38//-1	AF	DS		B	IC protector (ICPN38)	[F1,2]
11	VRD-HT2EY221J	AA	DD		C	Resistor (1/4W 220Ω ±5%)	[R1,2,3]
12	VRD-HT2EY222J	AA	DD		C	Resistor (1/4W 2.2KΩ ±5%)	[R4~11]
13	PTPE-0016QSZZ	AC	DJ	N	C	Tape	
14	RC-K1E104HCZZ	AB	DD		C	Capacitor (25WV 0.1μF)	
15	RCŌRF0002QSZZ	AE	DS		B	Core (HF57SH35)	
	(Unit)						
901	CPWBF0018QS52	AY	FQ		E	Delivery interface PWB	

31 MHPS PWB

NO.	PARTS CODE	PRICE RANK Ex.	PRICE RANK Ja.	NEW MARK	PART RANK	DESCRIPTION
1	DHAi-0099QSZZ	AE	DS	N	C	Scanner cover sensor harness
2	LBNDJ0037FCZ1	AA	DJ		C	Wire band (T18S)
3	VCKYPU1HB102K	AA	DD		C	Capacitor (50WV 0.001μF)
4	VHPGP1S53V/-1	AE	DS		B	Photo transistor (GP1S53V)
	(Unit)					
901	CPWBF1177FC69	AU	FG	N	E	MHPS PWB

■ Index

PARTS CODE	JAPAN ONLY ORDER CODE	NO.	PRICE R. Ex.	PRICE R. Ja.	NEW	P/R
【C】						
CCAB-0012QS07	572 107 1825	1- 10	BD	GJ	N	D
CCAB-0012QS08	572 107 1823	1- 10	BC	GJ	N	D
CCAB-0012QS16	572 107 1827	1- 10	BD	GJ	N	D
CCASZ0067FC02	572 108 0590	17-103	AM	EG		D
CCŌVH0010QS51	572 110 1105	1-501	BM	HV		E
CDAiU0012QS02	572 210 1119	4- 48	BL	HR	N	C
CFiX-0008QS01	572 211 0688	1- 7	AR	EQ		C
CFiX-0008QS02	572 211 0689	1- 7	AQ	EQ		C
CFiX-0008QS51	572 211 0698	1-502	BF	GN		E
CFiX-0008QS52	572 211 0699	1-502	BF	GN		E
CFRM-0020QS51	572 213 1927	13-501	BK	HG		E
CFTA-0001QS01	572 117 0100	1- 11	AX	FG	N	D
CHNG-0007QS01	572 246 0383	1- 3	AM	EG		C
CPLTM0047QS02	572 221 7150	10- 18	BA	FX	N	C
CPLTM0075QS01	572 221 7036	14- 58	AL	EB		C
CPLTM0114QS01	572 221 7018	11- 46	AG	DX		C
CPWBF0018QS52	572 684 3343	14- 3	AY	FQ		E
〃	572 684 3343	28-901	AY	FQ		E
CPWBF1177FC68	572 684 3308	14- 61	AP	EQ		E
CPWBF1177FC69	572 684 3382	4- 64	AU	FG	N	E
〃	572 684 3382	31-901	AU	FG	N	E
CPWBN0024QS53	572 684 3384	2- 19	BP	LP	N	E
〃	572 684 3384	19-901	BP	LP	N	E
CPWBN0024QS54	572 684 3360	2- 19	BQ	LP	N	E
〃	572 684 3360	19-901	BQ	LP	N	E
CPWBX0021QS56	572 684 3335	12- 37	CD	UD	N	E
〃	572 684 3335	18-901	CD	UD	N	E
CSFTZ0023QS01	572 290 2465	14- 51	AH	DX		C
【D】						
DHAi-0099QSZZ	572 542 1514	31- 1	AE	DS	N	C
DHAi-0102QSZZ	572 542 1509	4- 59	AL	EB	N	C
DHAi-0103QSZZ	572 542 1515	4- 59	AM	EG	N	C
【G】						
GCAB-0013QSZZ	572 107 1763	1- 18	BC	GD		D
GCAB-0014QSZZ	572 107 1764	1- 15	AY	FQ		D
GCAB-0015QSZZ	572 107 1765	1- 23	AV	FG		D
GCAB-0017QSZZ	572 107 1779	2- 5	AV	FG		D
GCŌVH0010QSZZ	572 110 1079	1- 1	BE	GN		D
GCŌVH0011QSZZ	572 110 1080	1- 22	AP	EQ		D
GCŌVH0012QSZZ	572 110 1094	12- 2	AS	EQ		C
GCŌVH0014QSZZ	572 110 1096	12- 1	AR	EQ		C
GCŌVH0018QSZZ	572 110 1099	14- 2	AQ	EQ		C
GDŌR-0001QSZZ	572 113 0043	3- 1	AW	FG		D
GFTA-0001QSZZ	572 117 0097	1- 11	AW	FG		D
【H】						
HPNLH0004QS10	572 158 0617	2- 3	AV	FG	N	D
HPNLH0004QS11	572 158 0629	2- 3	AV	FG	N	D
HPNLH0004QS12	572 158 0618	2- 3	AV	FG	N	D
HPNLH0004QS13	572 158 0619	2- 3	AV	FG	N	D
HPNLH0004QS14	572 158 0620	2- 3	AV	FG	N	D
【L】						
LANGT0003QSZZ	572 200 1420	6- 50	AD	DJ	N	C
LBNDJ0037FCZ1	572 201 0119	31- 2	AA	DJ		C
LBNDJ0043FCZ1	572 201 0125	12- 42	AA	DJ		C
LBSHZ0227FCZZ	581 204 0002	4- 60	AC	DD		C
LFiX-0007QSZ1	572 211 0693	7- 31	AE	DJ		C
LFiX-0016FCZZ	572 211 0172	12- 53	AD	DJ		C
LFiX-0084FCZZ	572 211 0372	12- 53	AC	DD		C
LFRM-0016QSZ1	572 213 1961	3- 10	AT	EZ	N	C
LFRM-0020QSZZ	572 213 1918	13- 33	AV	FG		C
LHLDZ0033QSZ1	572 214 1931	3- 15	AF	DS	N	C
LHLDZ7021XCZZ	569 214 0006	4- 68	AD	DJ		C
LPFTF0001QSZZ	572 217 0088	12- 52	AC	DJ	N	C
LPLTM0053QSZ1	572 221 7143	16- 1	AS	EQ	N	C
LPLTM0066QSZ1	572 221 7144	11- 10	AF	DS	N	C
LPLTM0082QSZ1	572 221 7116	12- 12	AS	EQ	N	C
LPLTM0085QSZZ	572 221 7146	4- 54	AK	DX	N	C
LPLTM0101QSZ1	572 221 7147	7- 11	AD	DJ	N	C
LPLTM0112QSZZ	572 221 7022	11- 48	AE	DJ		C
LPLTM0119QSZZ	572 221 7135	4- 54	AK	DX	N	C
LPLTM0125QSZZ	572 221 7117	11- 52	AD	DJ	N	C
LPLTM0134QSZZ	572 221 7154	12- 62	AD	DJ	N	C
LPLTM0136QSZZ	572 221 7156	11- 50	AD	DJ	N	C
LPLTM2642FCGZ	572 221 5110	16- 4	AD	DS		C
LPLTP0077QSZZ	572 221 7136	4- 63	AE	DJ	N	C
LRALP0005QSZZ	572 223 0234	11- 27	AN	EQ		C
LSŌU-0013QSZZ	572 226 0593	12- 3	BB	FX		D
LSTPP0003QSZZ	572 230 0496	14- 54	AE	DJ		C
LX-BZ0018QSZZ	572 970 1972	11- 51	AB	DD	N	C
LX-WZ0144FCZZ	572 990 0094	12- 58	AA	DD		C
【M】						
MLEVP0019QSZ1	572 248 1165	9- 34	AE	DJ	N	C
MLEVP0020QSZ1	572 248 1166	9- 35	AE	DJ	N	C
MLEVP0031QSZZ	572 248 1163	4- 65	AE	DJ	N	C
MSPRC0083QSZ1	572 258 3311	3- 14	AD	DJ	N	C
MSPRC0084QSZ1	572 258 3312	3- 13	AD	DJ	N	C
MSPRC0099QSZ1	572 258 3323	11- 38	AC	DJ	N	C
MSPRC0105QSZ1	572 258 3320	6- 26	AB	DJ	N	C
MSPRC0152QSZZ	572 258 3303	16- 15	AB	DJ	N	C
MSPRD0119QSZZ	572 258 3306	4- 66	AC	DJ	N	C
MSPRD0121QSZZ	572 258 3307	9- 53	AB	DJ	N	C
MSPRD0122QSZZ	572 258 3308	9- 52	AB	DJ	N	C
MSPRD0144QSZZ	572 258 3265	14- 52	AC	DJ		C
MSPRD0148QSZZ	572 258 3317	11- 53	AB	DJ	N	C
MSPRT0089QSZ1	572 258 3313	9- 32	AC	DJ	N	C
MSPRT0107QSZZ	572 258 3278	14- 55	AC	DJ		C
【N】						
NBRGP0567FCZZ	572 272 0558	9- 8	AG	DX		C
NBRGY2122SCZZ	595 272 0047	14- 15	AB	DD		B
NGERH0067QSZZ	572 281 1812	14- 56	AD	DJ		C
NGERH0068QSZZ	572 281 1813	14- 57	AD	DJ		C
NGERH0078QSZZ	572 281 1817	11- 44	AE	DJ		C
NGERH1169FCZZ	572 281 1385	11- 45	AF	DS		C
NRŌLM0037QSZZ	572 287 1907	14- 6	AR	EQ		C
NRŌLR0031QSZ1	572 287 1916	9- 27	BC	GJ	N	C
【P】						
PBRSR0004QSZZ	572 310 0306	9- 50	AE	DS		B
PCŌVP0030QSZZ	572 323 1913	13- 1	AN	EG		C
PCŌVP0032QSZ1	572 323 1943	11- 37	AD	DJ	N	C
PGiDH0033QSZ1	572 345 3269	9- 25	AK	EB	N	C
PMLT-0029QSZZ	572 375 0900	4- 67	AG	DX	N	C
PMLT-0030QSZZ	572 375 0901	1- 36	AD	DJ	N	C
PSHEA0004YSZ1	572 403 4483	8- 31	AC	DJ	N	C
PSHEP0053QSZ3	572 403 4517	9- 24	AK	DX	N	C
PSHEP0092QSZZ	572 403 4464	4- 62	AC	DJ	N	C
PSHEZ0058QSZZ	572 403 4392	1- 2	AY	FQ		C
PSHEZ0125QSZZ	572 403 4459	15- 19	AE	DS	N	C
PSHEZ0129QSZZ	572 403 4485	15- 18	AG	DX	N	C
PSHEZ0133QSZZ	572 403 4518	11- 23	AD	DJ	N	C
PSHEZ0134QSZZ	578 403 0494	11- 54	AC	DJ	N	C
PSHEZ0135QSZZ	572 403 4519	12- 64	AC	DJ	N	C
PSHEZ0136QSZZ	572 403 4520	12- 61	AC	DJ	N	C
PTME-0007GCZA	578 420 0030	9- 19	AG	DS		C
PTME-0014QSZZ	572 420 0310	9- 51	AK	DX	N	B
PTME-0020GCZZ	578 420 0022	9- 19	AG	DX		C
〃	578 420 0022	9- 54	AG	DX		C
PTPE-0016QSZZ	572 423 0221	28- 13	AC	DJ	N	C
【Q】						
QCNCM2401SC0F	595 510 0782	28- 2	AB	DJ		C
QCNCM7014SC0C	595 510 0338	28- 3	AA	DD		C
QCNCW0022QSZZ	572 510 1060	27- 2	AE	DJ		C
【R】						
RC-K1E104HCZZ	595 593 0020	28- 14	AB	DD		C
RCiLZ0006QSZZ	572 614 0264	12- 59	BE	GN	N	B
RCŌRF0002QSZZ	572 615 0066	28- 15	AE	DS		B
RMŌTP0018QSZZ	572 630 0968	14- 59	AV	FG		B
【S】						
SPAKA0110QSZZ	572 902 1507	17- 4	AZ	FQ	N	D
SPAKA0134QSZZ	572 902 1474	17- 7	AE	DJ		D
SPAKA0138QSZZ	572 902 1501	17- 14	AG	DX	N	D
SPAKA0167QSZZ	572 902 1508	17-105	AD	DJ	N	D
SPAKC0112QS12	572 901 1550	17- 1	AZ	FQ	N	D
SPAKC0112QS14	572 901 1552	17- 1	AZ	FQ	N	D
SPAKC0136QSZZ	572 901 1554	17- 1	AZ	FQ	N	D
SPAKC0146QSZZ	572 901 1556	17- 1	AZ	FQ	N	D
【T】						
TCADS0764FCZZ	577 913 0005	17-104	AE	DJ		D
TiNSE0125QSZZ	572 916 1627	17- 18	AQ	EQ	N	D
TiNSE0126QSZZ	———	17- 18	——	——	N	D
TiNSE0173QSZZ	———	17- 18	——	——	N	D
TiNSF0127QSZZ	———	17- 18	——	——	N	D
TiNSG0128QSZZ	———	17- 18	——	——	N	D
TiNSi0130QSZZ	———	17- 18	——	——	N	D
TiNSJ0124QSZZ	572 916 1626	17- 18	AX	ZZ	N	D
TiNSS0129QSZZ	———	17- 18	——	——	N	D
TiNSZ0131QSZZ	———	17- 18	——	——	N	D
TiNSZ0132QSZZ	———	17- 18	——	——	N	D
TLABH0065QSZZ	572 917 3371	17- 13	AN	EG		C
TLABH0069QSZZ	572 917 3372	17- 13	AN	EG		C

PARTS CODE	JAPAN ONLY ORDER CODE	NO.	PRICE R. Ex.	PRICE R. Ja.	NEW	P/R
TLABH0116QSZZ	572 917 3382	17- 13	AN	EG	N	C
TLABH0124QSZZ	572 917 3396	3- 20	AC	DJ	N	C
【V】						
VCKYPU1HB102K	541 595 1004	31- 3	AA	DD		C
VHi16163CLT-6	572 573 1771	18-115	BA	FX		B
VHi29F400BCC1	572 573 1866	18- 81	BA	FX	N	B
VHiSC65165V6T	596 573 2808	18-114	BW	RR		B
VHiSTA401A/-1	572 576 0006	28- 8	AP	EQ		B
VHiW24257A12J	594 573 1696	18- 80	AN	EG		B
VHPGP1S53V/-1	578 574 0031	31- 4	AE	DS		B
VHPGP2D03//-1	572 568 0101	4- 56	BA	FX	N	B
VHPGP2D032/-1	572 568 0102	4- 61	BA	FX	N	B
VHPGP2D061/-1	572 568 0103	4- 61	AY	FQ	N	B
VHPGP2D07//-1	572 568 0104	4- 56	BA	FX	N	B
VHPMPG3864K-J	572 574 0298	19- 20	AC	DJ		B
VHViCPN38//-1	585 577 0022	28- 10	AF	DS		B
VRD-HT2EY221J	507 581 5014	28- 11	AA	DD		C
VRD-HT2EY222J	590 581 0041	28- 12	AA	DD		C
VRH-ST2HB157K	572 581 1817	9- 49	AD	DJ		C
VRS-TP2BD6R8J	572 581 1881	19- 28	AA	DD		C
【X】						
XBBSD30P04000	541 970 5027	7- 10	AA	DD		C
XBBSD30P08000	571 970 0241	4- 57	AA	DD		C
XEBSD30P08000	578 970 0105	14- 50	AA	DD		C
XEBSD40P12000	578 970 0084	12- 55	AA	DD		C
〃	578 970 0084	12- 60	AA	DD		C
XEBSE40P10000	572 970 0575	1- 4	AA	DD		C
XEBSE40P12000	572 970 1447	11- 47	AA	DD		C
XEBSE40P14000	572 970 1506	11- 49	AA	DD		C
XEPSD40P30000	572 970 0583	12- 54	AA	DD		C
XHBS230P06000	572 970 1971	6- 51	AA	DD		C
XHBSD30P06000	541 970 1017	4- 58	AA	DD		C
XHBSD30P08000	578 970 0060	12- 29	AA	DD		C
XHBSD30P10000	572 970 0530	12- 28	AA	DD		C
XHBSE30P08000	595 970 0163	12- 63	AA	DD		C
XHBSF30P05000	594 970 0287	14- 60	AA	DD		C
XNESD30-24000	541 980 0002	4- 55	AA	DD		C
XRESP30-06000	541 399 5002	14- 62	AA	DD		C
XRESP40-06000	509 399 5001	14- 53	AA	DD		C
XRESP70-08000	571 399 0027	11- 43	AA	DD		C
XWHSD40-08100	541 990 0043	12- 57	AA	DD		C
〃	541 990 0043	12- 65	AA	DD		C
XWSSD40-10000	571 990 0071	12- 56	AA	DD		C

PARTS CODE	JAPAN ONLY ORDER CODE	NO.	PRICE R. Ex.	PRICE R. Ja.	NEW	P/R

SHARP

COPYRIGHT © 1999 BY SHARP CORPORATION
All rights reserved.
Printed in Japan.
No part of this publication may be reproduced,
stored in a retrieval system, or transmitted,
in any form or by any means,
electronic, mechanical, photocopying, recording, or otherwise,
without prior written permission of the publisher.

SHARP CORPORATION
Printing & Reprographic Systems Group
Quality & Reliability Control Center
Yamatokoriyama, Nara 639-1186, Japan
February 1998 Printed in Japan Ⓝ

SHARP SERVICE MANUAL

CODE: 00ZAR205//A1E

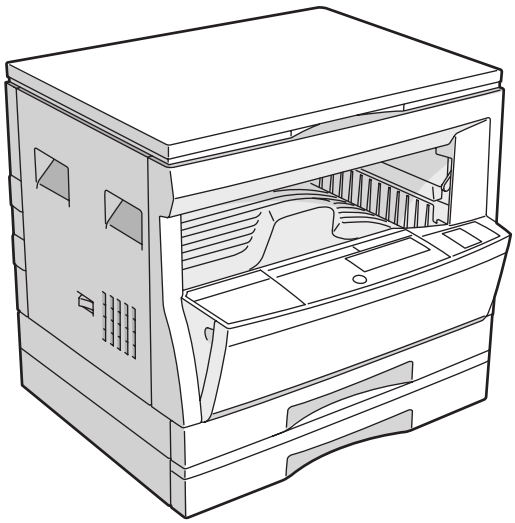

DIGITAL COPIER

AR-160
AR-161
AR-200
MODEL AR-205

CONTENTS

[1] GENERAL 1-1
[2] SPECIFICATIONS 2-1
[3] CONSUMABLE PARTS 3-1
[4] EXTERNAL VIEWS AND INTERNAL STRUCTURES 4-1
[5] UNPACKING AND INSTALLATION 5-1
[6] ADJUSTMENTS 6-1
[7] SIMULATIONS 7-1
[8] USER PROGRAMS 8-1
[9] TROUBLE CODE LIST 9-1
[10] MAINTENANCE 10-1
[11] DISASSEMBLY AND ASSEMBLY 11-1
[12] FLASH ROM VERSION UP PROCEDURE 12-1
[13] ELECTRICAL SECTION 13-1

Parts marked with " ⚠ " are important for maintaining the safety of the set. Be sure to replace these parts with specified ones for maintaining the safty and performance of the set.

SHARP CORPORATION

This document has been published to be used for after sales service only.
The contents are subject to change without notice.

Warning!
This product is a class A product.
If it is operated in households, offices or similar surroundings, it can produce radio interferences at other appliances, so that the user has to take adequate countermeasures.

CLASS 1 LASER PRODUCT

LASER KLASSE 1

LUOKAN 1 LASERLAITE

KLASS 1 LASERAPPARAT

VAROITUS!

LAITTEEN KÄYTTÄMINEN MUULLA KUIN TÄSSÄ KÄYTTÖOHJEESSA MAINITULLA TAVALLA SAATTAA ALTISTAA KÄYTTÄJÄN TURVALLISUUSLUOKAN 1 YLITTÄVÄLLE NÄKYMÄTTÖMÄLLE LASERSÄTEILYLLE.

VARNING

OM APPARATEN ANVÄNDS PÅ ANNAT SÄTT ÄN I DENNA BRUKSANVISNING SPECIFICERATS, KAN ANVÄNDAREN UTSÄTTAS FÖR OSYNLIG LASERSTRÅLNING, SOM ÖVERSKRIDER GRÄNSEN FÖR LASERKLASS 1.

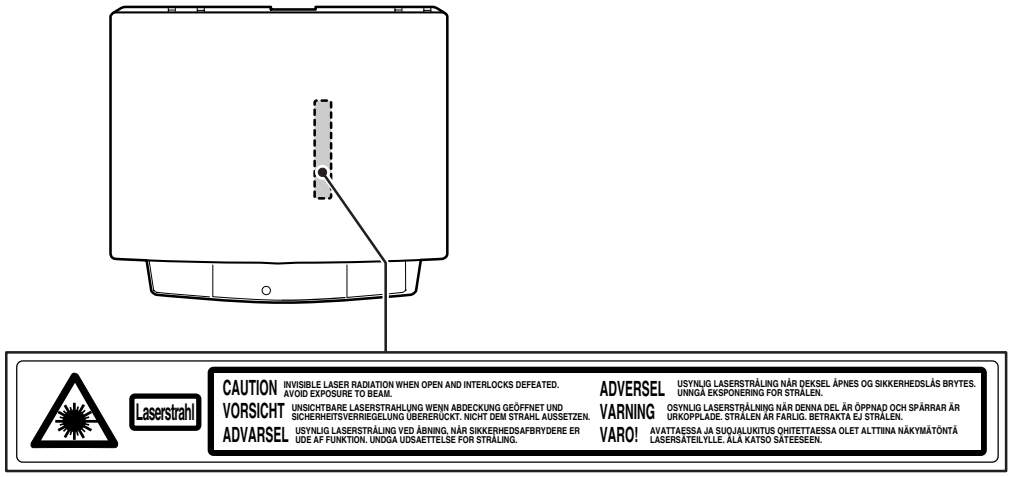

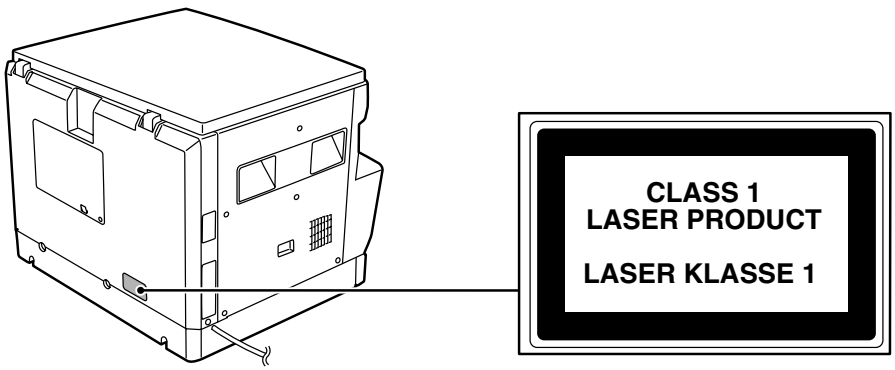

Disconnect the AC cord before servicing the unit.

CONTENTS

[1] GENERAL 1-1
1. Note for servicing 1-1

[2] SPECIFICATIONS 2-1
1. Copy mode 2-1

[3] CONSUMABLE PARTS 3-1
1. Supply system table 3-1
2. Environment conditions 3-3
3. Production number identification 3-3
4. Consumable parts recycling procedure 3-4

[4] EXTERNAL VIEWS AND INTERNAL STRUCTURES 4-1
1. Appearance 4-1
2. Internal 4-1
3. Operation Section 4-2
4. Motor, solenoid, clutch 4-3
5. Sensor, switch 4-4
6. PWB unit 4-5
7. Cross sectional view 4-6

[5] UNPACKING AND INSTALLATION 5-1
1. Installing conditions 5-1
2. Removal of protective material and fixing screw 5-1
3. Installation of developing cartridge 5-1
4. Removal and storage of fixing screw 5-2
5. Changing the copy paper size in the tray 5-3

[6] ADJUSTMENTS 6-1
1. Adjustment item list 6-1
2. Copier adjustment 6-1

[7] SIMULATIONS 7-1
1. Entering the simulation mode 7-1
2. Cancelling the simulation mode 7-1
3. List of simulations 7-1
4. Contents of simulations 7-2

[8] USER PROGRAMS 8-1
1. List of user programs 8-1
2. Setting the user programs 8-1

[9] TROUBLE CODE LIST 9-1
1. Trouble code list 9-1
2. Details of trouble codes 9-1

[10] MAINTENANCE 10-1
1. Maintenance table 10-1

[11] DISASSEMBLY AND ASSEMBLY 11-1
1. High voltage section/Duplex transport section . 11-1
2. Optical section 11-2
3. Fusing section 11-3
4. Paper exit section 11-5
5. MCU 11-7
6. Optical frame unit 11-7
7. LSU 11-7
8. Tray paper feed section/ Paper transport section 11-8
9. Manual multi paper feed section 11-9
10. Power section 11-11
11. Developing section 11-12
12. Process section 11-13

[12] FLASH ROM VERSION UP PROCEDURE . . 12-1
1. MCU/E-SORT 12-1
2. PRINTER CONTROL PWB FIRMWARE VERSION UP<With an option installed> 12-1

[13] ELECTRICAL SECTION 13-1
1. BLOCK DIAGRAM 13-1
2. ACTUAL WIRING DIAGRAM 13-2

[1] GENERAL

1. Note for servicing

Pictogram

This Service Manual uses some pictographs to assure safe operation.

Please understand the meanings of pictographs before servicing.

⚠ WARNING: If this WARNING should be ignored, a serious danger to life or a serial injury would be resulted.

⚠ CAUTION: If this CAUTION should be ignored, an injury or a damage to properties would be resulted.

Meanings of pictographs

△This pictograph means that a care must be taken. In the pictograph, the concrete content is drawn. (High temperature in this example)

⃠This pictograph means inhibition. The concrete content of inhibition is shown in or near the pictograph. (Inhibition of disassembly in this example)

●This pictograph means a thing which must be done. (Disconnecting the power plug from the power outlet in this example)

A. ⚠ WARNING

1) Never use a power source of more than 15A, 100V.
   Avoid complex wiring, which may lead to a fire or an electric shock.
2) When any abnormality occurs, such as smoke or bad smell, do not use the machine. If used in abnormal conditions, a fire or an electric shock may be resulted.
3) Be sure to connect the grounding wire. If an electric leakage occurs without grounding, a fire or an electric shock may be resulted. To protect the machine and the power unit from lightening, grounding must be made.
4) When removing the cabinet of the machine, use an extreme care. There is a high voltage section inside the machine which may cause an electric shock when touched. Do not leave the machine with the cabinet removed. It is very dangerous for the user to touch the inside of the machine.
5) Do not damage, brake, or work the power cord. Do not put a heavy thing on the power cord. Do not pull or bend the power cord extremely. Otherwise, the power cord may be damaged to cause a fire or an electric shock.
6) Do not put a vessel with water in it on the machine. Do not put a metal piece on the machine, which may drop into the machine, causing a fire or an electric shock.
7) If water or a metal piece drops into the machine, turn off the power switch, disconnect the power plug, then remove the dropped thing.
8) Do not use a wet hand to disconnect or insert the power plug and to operate or service the machine. It may cause an electric shock.

B. ⚠ CAUTION

1) Avoid installation on an unstable surface or a slant surface. Otherwise, it may drop from the surface, resulting in an injury. It is advisable to use the optional paper feed desk or the exclusive-use desk.
2) Avoid installation in a humid or dusty place. Otherwise, a fire or an elctric shock may be resulted.
3) The fusing section is very high. Be careful not to burn when servicing.

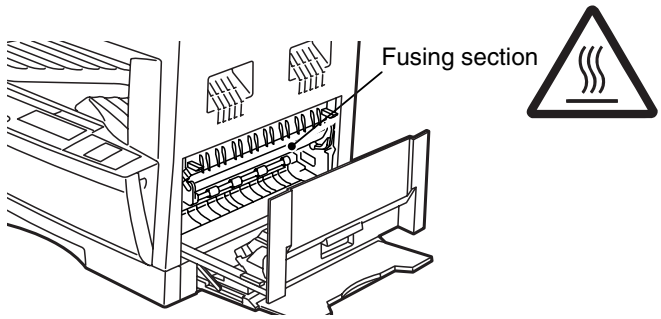

4) When disconnecting the power plug from the power outlet, do not pull the power cord. Otherwise, the cord may be damaged, resulting in exposed core or disconnection, causing a fire or an electric shock.
5) Do not throw toner or a toner cartridge in a fire. Otherwise, toner may pop and burn you.
6) When using the optional paper feed desk or the exclusive-use desk, be sure to fix the adjusters on the floor, and lock the casters.
   As shown in the figure, rotate the adjuster in the fixing direction until it makes contact with the floor. Lock the casters to fix the machine. (If the casters are not locked, the machine may gradually move so that the SPF cable may be rubbed with the wall, causing disconnection.

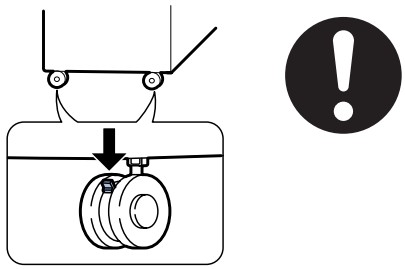

When moving the machine a little for reforming the office, turn the adjuster to release lock of the casters. (After moving, lock the adjusters and casters to fix the machine.)

7) Do not see the light source and the laser beams. Otherwise the eyes may be damaged.
8) When moving the machine, turn off the power switch and the heater switch, and be sure to disconnect the power plug from the power outlet. If not, the cord may be damaged to cause a fire or an electric shock.
9) It is very dangerous to perform reception or printing during servicing. When servicing with the cabinet removed, pull out the telephone line and the printer cable from the machine. (The laser print function and the Fax function are options.)
10) There are some sharp edges inside the machine. Be careful not to injure your fingers when servicing.

[2] SPECIFICATIONS

1. Copy mode

A. Type

Type	Desk-top

B. Machine composition

AR-160	16-model standard model
AR-161	16-model standard model (with shifter)
AR-200	20-model standard model (with shifter)
AR-205	20-model duplex model (with shifter)

(1) Option

Machine	Model	Power supply
250 sheets paper feed unit	AR-DE5	Supplied by the copier.
500 sheets paper feed unit	AR-DE6	Supplied by the copier.
SPF	AR-SP2	Supplied by the copier
RSPF	AR-RP1	Supplied by the copier
Original cover	AR-VR1	
Electronic sorting kit	AR-EB3	Supplied by the copier.
Printer expansion kit	AR-PB8	Supplied by the copier.
Facsimile extension kit	AR-FX2	Supplied by the copier.
LCD panel kit (20 digits × 2 lines)	AR-PA1	Supplied by the copier.
Job separator tray	AR-TR2	
PS2 expantion kit	AR-PS1	
Extension memory for FAX (2MB)	AR-MM5	
Extension memory for FAX (4MB)	AR-MM6	
Extension memory for FAX (8MB)	AR-MM7	

C. Copy speed

(1) Scan One Print many

AR-160	Not available (Available for AR-161 for USA/Canada)
AR-161	
AR-200	Available
AR-205	

Condition: Copy speed in the normal copy from all the paper feed ports including the manual paper feed port.

(2) Continuous copy speed (Sheets/min)

a. AR-160/161

Paper size		Normal	Enlargement (200%)	Reduction (50%)
AB system	A3	9	9	9
	B4	10	10	10
	A4	16	16	14
	A4R	12	12	12
	B5	16	16	16
	B5R	14	14	14
Inch system	11" × 17"	9	9	9
	8.5" × 14"	10	10	10
	8.5" × 13"	10	10	10
	8.5" × 11"	16	16	14
	8.5" × 11"R	12	12	12
	8.5" × 5.5"	16	16	16

b. AR-200/205

Paper size		Normal	Enlargement (200%)	Reduction (50%)
AB system	A3	11	11	11
	B4	12	12	12
	A4	20	20	20
	A4R	14	14	14
	B5	20	20	20
	B5R	16	16	16
Inch system	11" × 17"	10	10	10
	8.5" × 14"	12	12	12
	8.5" × 13"	12	12	12
	8.5" × 11"	20	20	20
	8.5" × 11"R	15	15	15
	8.5" × 5.5"	20	20	20

D. First copy time

(1) Basic speed

First copy time	7.2sec (A4, 8.5" × 11"/1st cassette/with OC)

E. Document

Max. document size	A3, 11" × 17"	
Document reference position	Left side center	
Detection (Platen)	AR-160	None
	AR-161	
	AR-200	Available
	AR-205	
Detection size	A3, B4, A4, A4R, B5, B5R, A5 11" × 17", 8.5" × 14", 8.5" × 13", 8.5" × 11", 8.5" × 11"R, 8.5" × 5.5" (8.5" × 13" is detected by key input.)	

(1) SPF/R-SPF

Standard/Option	Option SPF, AR-SP2 RSPF; AR-RP1 (AR-205 only)
Document load capacity	30 sheets (56 ~ 90g/m^2 equivalent) (15 ~ 23.9 lbs.)
Document size (Max. ~ Min.)	A3 ~ A5 11" × 17" ~ 8.5" × 5.5" (8.5" × 5.5", duplex is inhibited.)
Document replacement speed	16 sheets/min (A4 × 8.5" × 11" normal copy)
Document set/Paper feed direction	Face up, Center reference, Paper feed from the top
Document weight	56 ~ 90g/m^2, 15 ~ 23.9 lbs
Document size detection	On the document feed tray
Document mixture	Copy mode: Not Available

F. Paper feed

Copy size (Max. ~ Min.)	(A3 ~ A6) 11" × 17" ~ 8.5" × 5.5"	
Paper feed system	AR-160	1 cassette + Multi manual paper feed
	AR-161	
	AR-200	2 cassette + Multi manual paper feed
	AR-205	
Paper feed capacity	AR-160	50 × 1 (Paper feed tray) + 100 (Multi bypass feed tray)
	AR-161	
	AR-200	250 × 2 (Paper feed tray) + 100 (Multi bypass feed tray)
	AR-205	
Remaining quantity detection	Cassette section	Empty detection available, size detection by key input
	Manual tray	Only empty detection available

(1) Paper feed section of the copier

Paper feed size	A3, B4, A4, A4R, B5, B5R, A5 11" × 17", 8.5" × 14", 8.5" × 13", 8.5" × 11", 8.5" × 11"R, 8.5" × 5.5" (For A5 and 8.5" × 5.5", only No. 1 tray available.)
Side front	Front
Paper feed capacity	250 sheets (56 ~ 80g/m^2 equivalent) (15 ~ 21 lbs.)
Detection	Paper empty detection available, size detection (by key input)
Weight	56 ~ 80g/m^2 (15 lbs. ~ 21 lbs.)
Special paper	Recycled paper

(2) Manual paper feed section

Paper feed size	A3 ~ A6, 11" × 17" ~ 8.5" × 5.5"
Paper feed capacity	100 sheets
Detection	Size detection not available, paper empty detection available
Weight	56 ~ 128g/m^2 (15 ~ 34 lbs.)
Special paper	Recycled paper, OHP film, labels
Paper feed	Single except for recycled paper

(3) Option paper feed unit

	1-step paper feed unit	2-step paper feed unit
Model	AR-DE5	AR-DE6
Paper feed size	A3, B4, A4, A4R, B5, B5R 11" × 17", 8.5" × 14", 8.5" × 13", 8.5" × 11", 8.5" × 11"R	
Capacity (56 ~ 80g/m^2)	About 250 sheets × 1 step	About 250 sheets × 2 steps
Paper weight	56 ~ 80 g/m^2 (15 ~ 21 lbs.)	
Moisture preserving heater	None	
Detection	Paper empty detection, size detection (by key input)	
Paper size setting	User setting (by key input)	
External dimensions (W × D × H)	590 × 471 × 88mm	590 × 471 × 173.5mm
Weight	About 5kg	About 10kg
Special paper	Recycled paper	
Power	Supplied from the machine	

G. Job speed

S-S (1st step)	100% (document replacement rate) (AR-160/161) 80% (document replacement rate) (AR-200/205)

Condition: With SPF

H. Multi copy

Max. number of multi copy	99 sheets

I. Warmup time

Warmup time	Approx. 35 sec (Condition: Standard condition)
Pre-heat	Available

J. Copy magnification ratio

Fixed magnification ratio	AB system: 50, 70, 81, 86, 100, 115, 122, 141, 200% Inch system: 50, 64, 77, 95, 100, 121, 129, 141, 200%
Zooming	50 ~ 200%
Independent zooming/vertical	Available (50 ~ 200%)
Independent zooming (horizontal)	Available (50 ~ 200%)

K. Print density

Density mode	Auto/Manual/Photo
No. of manual adjustment	5 steps (Manual/Photo)
Toner save mode	Set by the user program

L. Void width

Void area	Lead edge 1 ~ 4mm, rear edge 4mm or less (Duplex 4mm or less), both sides 4mm or less
Image loss	Max. 4mm in total of lead edge and rear edge, max. 4mm in total of right and left edges (Normal copy)

M. Auto duplex

Standard/Option	Standard provision (AR-205 only) (D → D/D → S enable only when RSPF is installed) Not available for AR-160/161/200

N. Paper exit/finishing

Paper exit section capacity	Face down 250 sheets	
Job separator	Job separator, option (AR-TR2)	
	Upper: FAX/Printer, Lower: Copier Upper: 100sheets, Lower 150sheets	
Full detection	Available (Job separator upper step)	
Finishing	Electronic sort board: Option (AR-EB3)	
Electronic sort capacity	A4 (8.5" × 11") standard document 60 sheets	
Offset function	AR-160	None
	AR-161	Available (by the shifter)
	AR-200	
	AR-205	
Staple function	None	

(1) Electronic sort board (Option)

Electronic sort	Sorting	60 sheets of A4 standard documents
	Grouping	60 sheets of A4 standard documents
Rotation copy	If there is paper of same size as the document, the image is rotated to copy even though the paper is set in the different direction from the document direction.	
2 in 1, 4 in 1	Copies of 2 pages or 4 pages are integrated into one surface. Divided by solid lines, (Selectable by the user program.)	
Edge erase	Images surrounding the document are erased when copying. (Adjustable in 0 ~ 20mm by the user program.)	
Center erase	The image at the center is erased when copying. (Adjustable in 0 ~ 20mm by the user program.)	
Margin shift	Binding margin is made at the left edge of the set documents.	

O. Additional functions

APS*	○	(APS not available by flowing in during use of SPF)
AMS*	○	(AMS not available by flowing in during use of SPF)
Duplex	○ ×	AR-205 only available
Document count	×	
Sorter	△	When the electronic sort board installed.
Independent zooming	○	Vertical/Horizontal: 50 ~ 200%
1 set 2 copy	○	Enlargement inhibited, inhibited during the use of SPF
Binding margin	△	Shift width 9mm
Edge erase	△	Width 5mm (Adjustable 0 ~ 20mm)
Black-white reversion	○	Whole surface only
2 in 1, 4 in 1	△	
Rotation copy	△	
Memory copy	○ ×	(AR-200/205 and AR-161 for USA/Canada: Available)
Pre-heat function	○	Conditions set by the user program
Auto power shut off function	○	Conditions set by the user program
Auto tray switching	○	
Message display	△	(FAX/Printer extension)
User program	○	
Total counter	○	

○ : Available
× : Not available
* : By the document size set key
△ : When an option is installed

P. Other specifications

Photoconductor type	OPC (Organic Photo Conductor)
Photoconductor drum dia.	30mm
Copy lamp	Xenon lamp
Developing system	Dry 2-component magnetic brush development
Charging system	Saw teeth charging
Transfer system	(+) DC corotron
Separation system	(–) DC corotron
Fusing system	Heat roller
Cleaning system	Contact blade

Q. Package form

Body	Body/Accessaries

R. External view

External dimensions (W × D × H)	590 × 531 × 470 mm (AR-160/161) 590 × 531 × 523mm (AR-200/205)
Occupying area (W × D)	590 × 531mm (When the manual tray is installed.)
Weight	About 32kg (AR-160/161) About 35.2kg (AR-200) About 35.7kg (AR-205)

S. Power source

Voltage	AC120V, 220V, 240V ± 15%
Frequency	50/60Hz common

T. Power consumption

Max. power consumption	About 1.3KWh

* EnergyStar standard (The second level conformity)

Pre-heat	About 60Wh
Auto power shut off	0wh · about 4.8wh (when FAX or the printer expansion kit is installed)

U. Digital performance

Resolution	Reading	400 dpi
	Writing	600 dpi
Gradation	Reading	256 gradations
	Writing	Binary

[3] CONSUMABLE PARTS

1. Supply system table

A. USA, CANADA

NO	Name	Content	Life	Model name	Package	Remark
1	Developer cartridge (Black)	Toner/developer cartridge × 1 (Toner 610g, Developer 395g) Vinyl bag × 1	15K	AR-200TD (*1 AR-200TD-J)	1	Life setting by A4 (8.5" × 11") 6% document
2	Drum cartridge	Drum cartridge × 1 Vinyl bag × 1	30K	AR-200DR (*1 AR-200DR-J)	1	
3	Toner kit (Black)	Toner bottle (Toner 610g) × 10 Charging hose × 1 Toner cap × 10	150K	AR-200MT (*1 AR-200MT-J)	1	Life setting by A4 (8.5" × 11") 6% document
4	Waste toner box	Waste toner box × 10	*2	AR-200TB	1	
5	Developer kit (Black)	Toner bottle (Developer 395g) × 10 Developer cap × 10 DV blade × 10	150K	AR-200MD (*1 AR-200MD-J)	1	
6	Protective cover	MG cover × 10	*3	AR-200MG	1	
7	Drum kit	Drum × 1 Drum fixing plate	30K	AR-200MR (*1 AR-200MR-J)	1	
8	Blade kit	Blade × 10 Mocket (F/R) Each × 10	*4	AR-200CB	1	
9	Heat roller	Upper heat roller × 1	150K	AR-160UH	1	

* 1: For USA government

* 2: Replace every 10 times of developer cartridge recycling (Recommendation)

* 3: Replace every 2 times of developer cartridge recycling (Recommendation)

* 4: Replace every 2 times of drum cartridge recycling (Recommendation)

Note: Maintenance parts other than mentioned above must be ordered through the parts department using the proper part number.

B. Asia, Southeast Asia

NO	Name	Content	Life	Model name	Package	Remark
1	Developer cartridge (Black)	Toner/developer cartridge × 1 (Toner 610g, Developer 395g) Vinyl bag × 1	15K	AR-200TD	1	Life setting by A4 6% document
2	Drum cartridge	Drum cartridge × 1 Vinyl bag × 1	30K	AR-200DR	1	
3	Toner kit (Black)	Toner bottle (Toner 610g) × 10 Charging hose × 1 Toner cap × 10	150K	AR-200CT	1	Life setting by A4 6% document
4	Waste toner box	Waste toner box × 10	*2	AR-200TB	1	
5	Developer kit (Black)	Toner bottle × 10 (Developer 395g) Developer cap × 10 DV blade × 10	150K	AR-200CD	1	
6	Protective cover	MG cover × 10	*3	AR-200MG	1	
7	Drum kit	Drum × 1 Drum fixing plate	30K	AR-200CR	1	
8	Blade kit	Blade × 10 Mocket (F/R) Each × 10	*4	AR-200CB	1	
9	Heat roller	Upper heat roller × 1	150K	AR-160UH	1	

* 2: Replace every 10 times of developer cartridge recycling (Recommendation)

* 3: Replace every 2 times of developer cartridge recycling (Recommendation)

* 4: Replace every 2 times of drum cartridge recycling (Recommendation)

Note: Maintenance parts other than mentioned above must be ordered through the parts department using the proper part number.

C. Europe / Australia / New Zealand / Middle East / Africa / CIS

NO	Name	Content	Life	Model name	Package	Remark
1	Developer cartridge (Black)	Toner/developer cartridge × 1 (Toner 610g, Developer 395g) Vinyl bag × 1	15K	AR-200DC	1	Life setting by A4 6% document
2	Drum cartridge	Drum cartridge × 1 Vinyl bag × 1	30K	AR-200DM	1	
3	Toner kit (Black)	Toner bottle (Toner 610g) × 10 Charging hose × 1 Toner cap × 10	150K	AR-200LT	1	Life setting by A4 6% document
4	Waste toner box	Waste toner box × 10	*2	AR-200TB	1	
5	Developer kit (Black)	Toner bottle (Developer 395g) × 10 Developer cap × 10 DV blade × 10	150K	AR-200LD	1	
6	Protective cover	MG cover × 10	*3	AR-200MG	1	
7	Drum kit	Drum × 1 Drum fixing plate	30K	AR-200LR	1	
8	Blade kit	Blade × 10 Mocket (F/R) Each × 10	*4	AR-200CB	1	
9	Heat roller	Upper heat roller × 1	150K	AR-160UH	1	

* 2: Replace every 10 times of developer cartridge recycling (Recommendation)

* 3: Replace every 2 times of developer cartridge recycling (Recommendation)

* 4: Replace every 2 times of drum cartridge recycling (Recommendation)

D. Hong Kong / China

NO	Name	Content	Life	Model name	Package	Remark
1	Developer cartridge (Black)	Toner/developer cartridge × 1 (Toner 610g, Developer 395g) Vinyl bag × 1	15K	AR-200TD-C	1	Life setting by A4 6% document
2	Drum cartridge	Drum cartridge × 1 Vinyl bag × 1	30K	AR-200DR-C	1	
3	Toner kit (Black)	Toner bottle (Toner 610g) × 10 Charging hose × 1 Toner cap × 10	150K	AR-200CT-C	1	Life setting by A4 6% document
4	Waste toner box	Waste toner box × 10	*2	AR-200TB-C	1	
5	Developer kit (Black)	Toner bottle (Developer 395g) × 10 Developer cap × 10 DV blade × 10	150K	AR-200CD-C	1	
6	Protective cover	MG cover × 10	*3	AR-200MG-C		
7	Drum kit	Drum × 1 Drum fixing plate	30K	AR-200CR-C	1	
8	Blade kit	Blade × 10 Mocket (F/R) Each × 10	*4	AR-200CB-C	1	
9	Heat roller	Upper heat roller × 1	150K	AR-160UH	1	

* 2: Replace every 10 times of developer cartridge recycling (Recommendation)

* 3: Replace every 2 times of developer cartridge recycling (Recommendation)

* 4: Replace every 2 times of drum cartridge recycling (Recommendation)

Note: Maintenance parts other than mentioned above must be ordered through the parts department using the proper part number.

2. Environment conditions

A. Transport condition

(1) Transport conditions

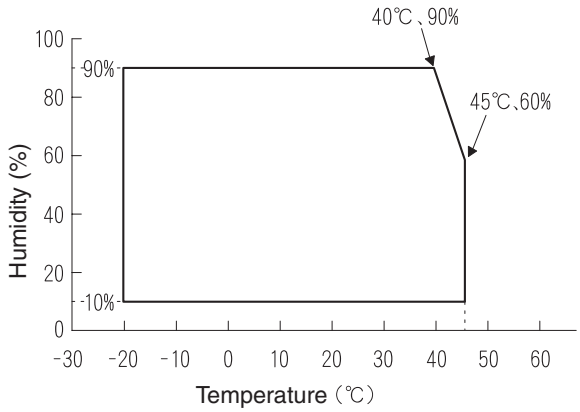

(2) Storage conditions (packed conditions)

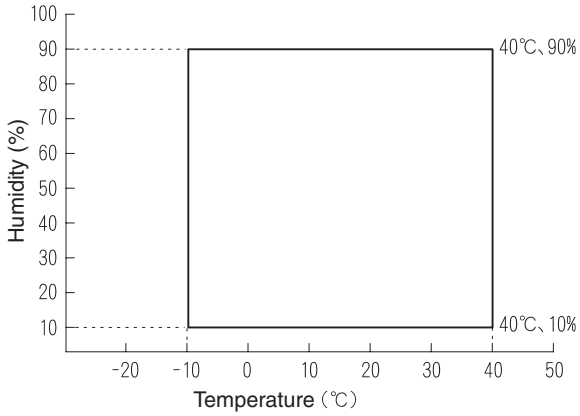

B. Use conditions

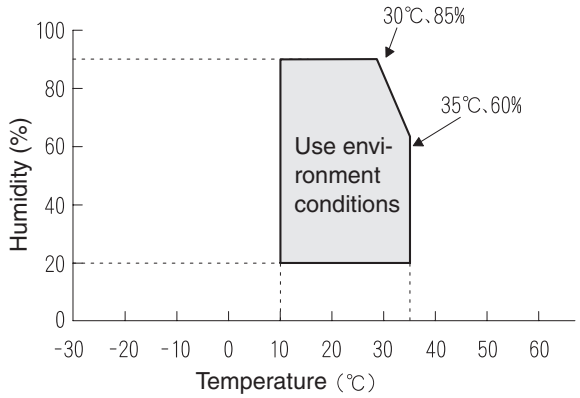

C. Life (packed conditions)

Photoconductor drum (36 months from the production month)
Developer, toner (24 months from the production month)

3. Production number identification

<TD cartridge>

The label on the drum cartridge shows the date of production.

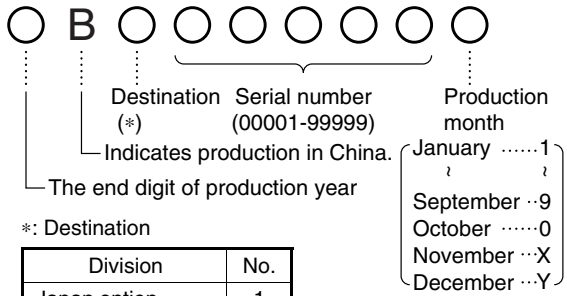

*: Destination

Division	No.
Japan option	1
Ex option	2
Japan, same pack	6
Ex, same pack	7

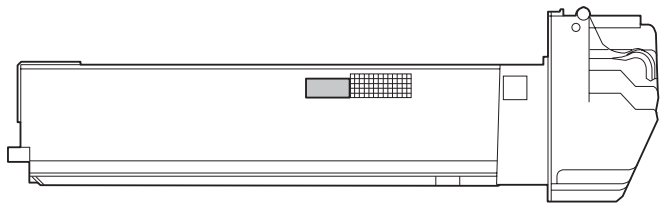

<Drum cartridge>

The label on the drum cartridge shows the date of production.

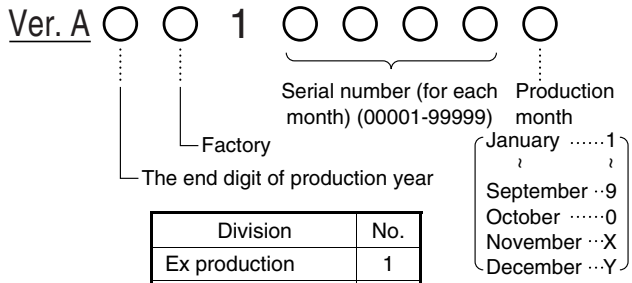

Division	No.
Ex production	1
Option	2
Same pack	3

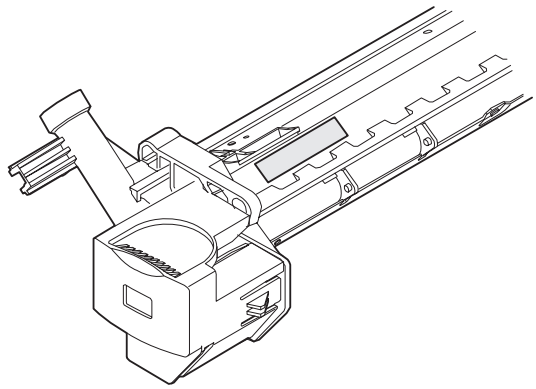

4. Consumable parts recycling procedure

A. TD cartridge

1) Check the external view.

Note: Be careful especially of breakage of the pins and the ATC sensor connector shown below.

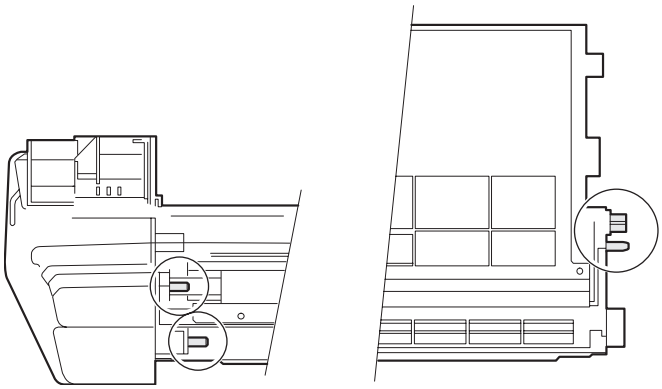

2) Remove the waste toner box unit.

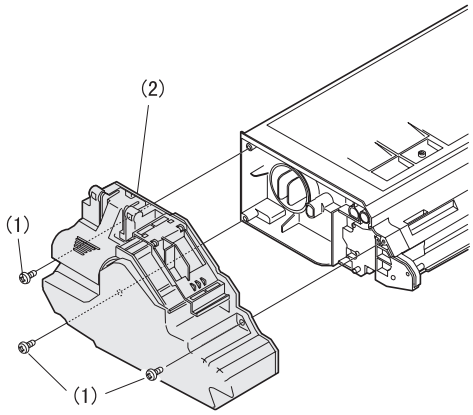

3) Remove the developing unit.

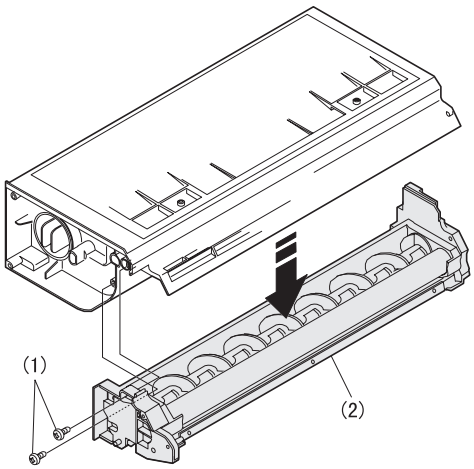

4) Remove the DV blade.

Note: Be sure to remove adhesive completely.
Remove adhesive together with the base PET.

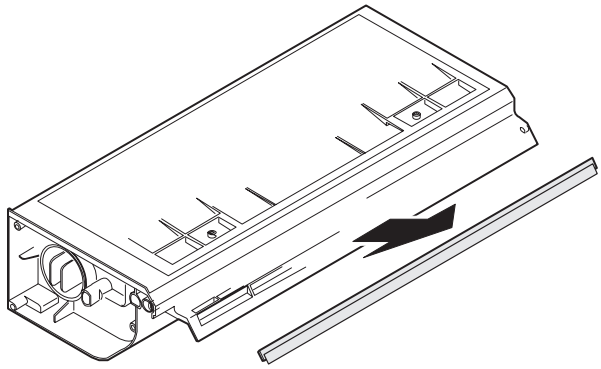

5) Tilt the developing unit, rotate the DV gear clockwise, and remove developer.
6) Clean and remove developer on the MG roller and toner on the developing doctor completely with a vacuum cleaner or an air blower.
7) Shake the developer bottle about 10 times and supply developer to the developing unit.
Turn the stirring roller to distribute developer evenly.
8) Install the toner box.
9) Shake the toner bottle about 20 times and install the toner supply hose to the toner bottle.
10) Remove the toner cap. While visually inspecting from the toner supply port, stop the TH shaft at the vertical position. (The TH mylar is on the lower side.) (Turn the gear on the back of the toner box counterclockwise to set the TH mylar on the lower side.)

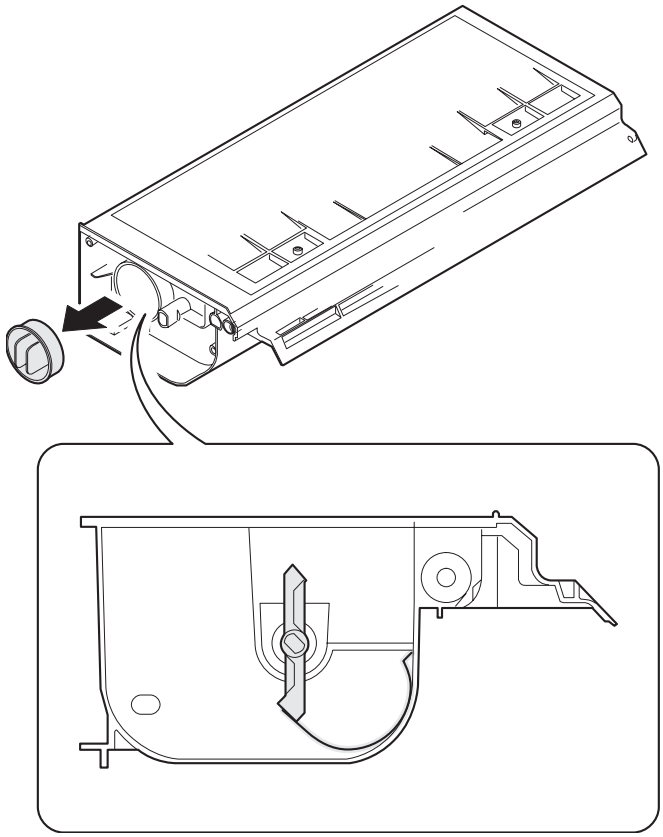

11) Face the toner supply port of the toner box upward with the toner bottle put straight, and insert the supply hose into the toner

supply port.

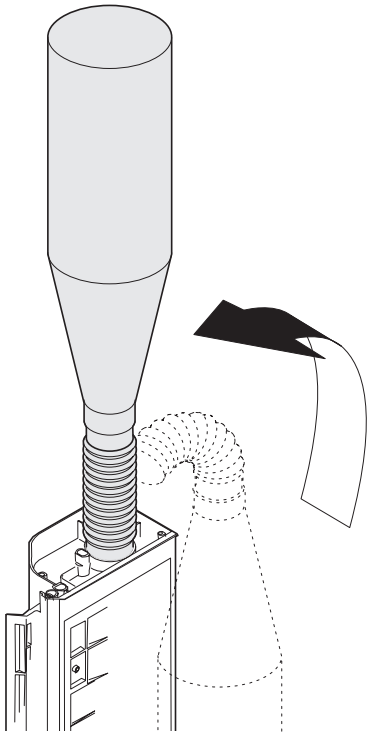

12) Lift the toner bottle and supply toner.
13) Remove the supply hose from the toner box with care not to spill toner, and attach the toner cap.

Note: If the toner cap is not attached properly, toner splash may occur.

14) Install the waste toner box.
15) Check the operations of the DV lever and the toner box shutter.
16) Wipe and clean the developer unit with alcohol, and attach the DV blade to it.

(Note)
- Dry alcohol completely before attaching the DV blade,
- When attaching the DV blade, be careful not to scratch it and eliminate slack.
- After attaching, be careful not to scratch and damage the DV blade.

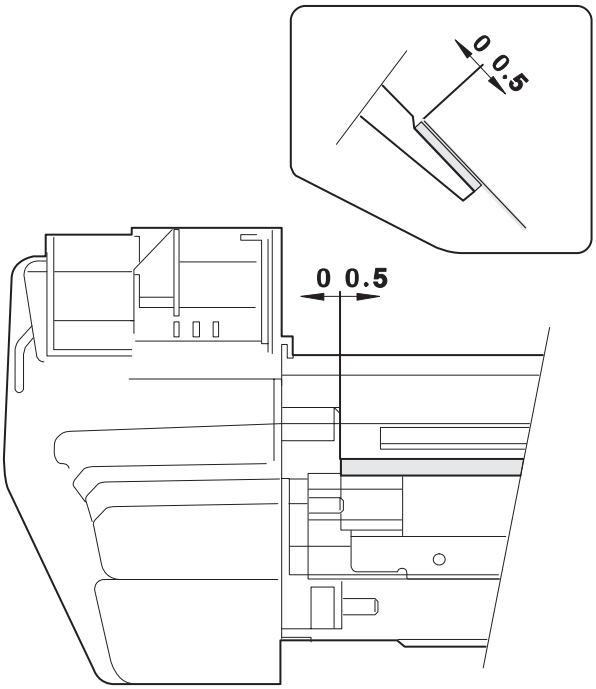

17) Shake the developing unit 5 times left and right horizontally.
18) Check the distribution state of developer on the MG roller.
Rotate the MG roller and visually check for no improper distribution of developer which may be caused by foreign materials.
19) Mark the number of times of recycling on the back of the toner box with white paint.
Max. times of recycling: 5 times

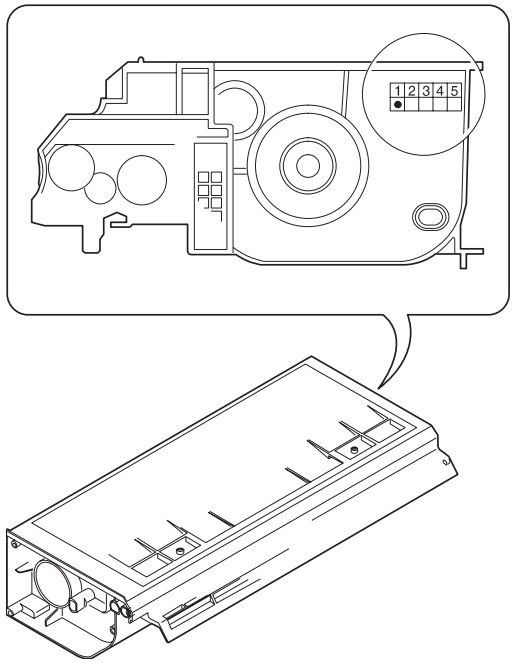

B. Drum unit

1) Check the external view.
- Check for damage or cracks on the boss and the boss hole.
- Check to insure that the waste toner pipe shutter slides smoothly.
- Check to insure that the star ring and the CRU washer rotate smoothly.

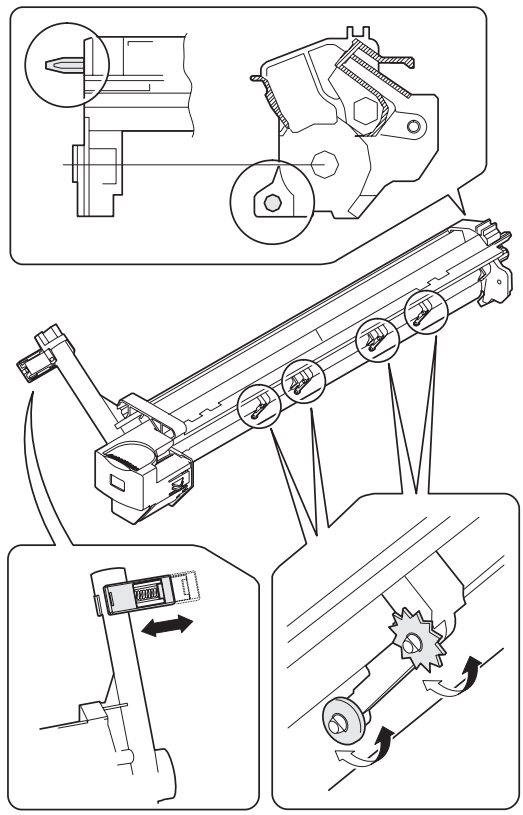

2) Remove the drum cover. (4 Lock Tabs)

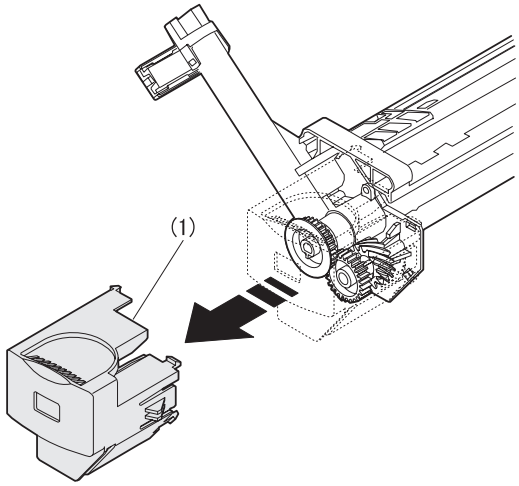

3) Remove the drum fixing plate and the photoconductor drum.

(Note) Dispose the drum fixing plate which was removed.

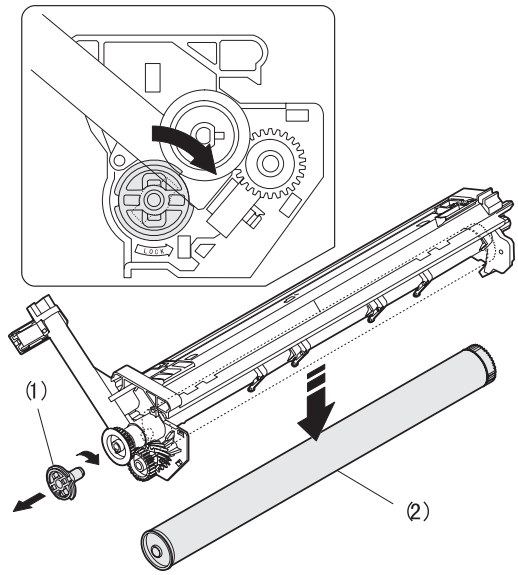

4) Check the cleaning blade and the red felt for no damage.
   - If there is any damage, execute all procedures from item 5) and later.
   - If there is no damage, execute the procedure of item 12).
5) Remove the main charger.
   (Cleaning the screen grid and the sawteeth.)

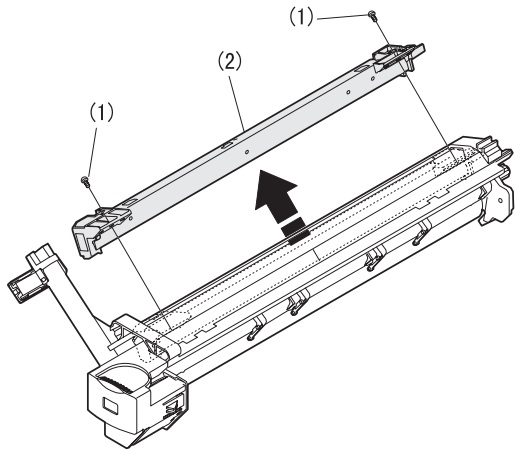

6) Remove the cleaning blade.

Note: Dispose the cleaning blade which was removed.

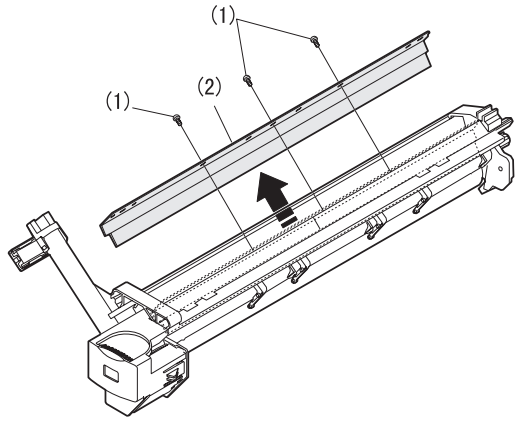

7) Clean the cleaning section and the waste toner pipe to remove waste toner completely with a vacuum cleaner.
8) Remove the felt and duplex tape completely.

Note: Be careful not to scratch or bend the sub blade.

9) Attach the cleaning blade.
10) Attach the felt.

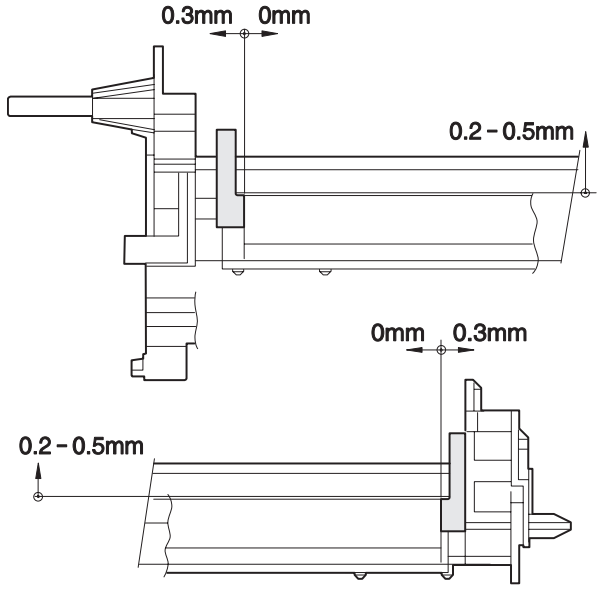

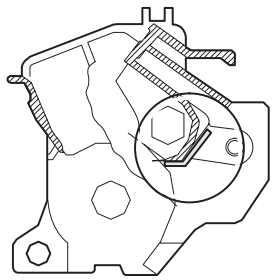

11) Attach the main charger.
12) Attach the drum fixing plate and the photoconductor drum.
Apply grease to the inside of the photoconductor drum. (Dia. 2)
13) Attach the detection gear.

Note: • The detection gear is not installed to the drum cartridge packed with the main body. Add a new one.

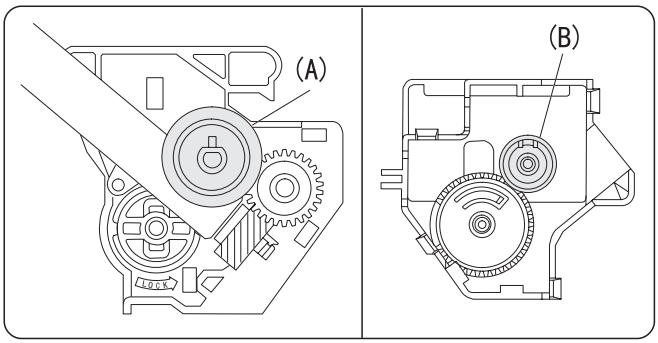

14) Attach the drum cover.

Note: After attaching the drum cover, do not make a copy.

15) Mark the number of times of recycling on the side of the cover with white paint.
Max. times of recycling: 5 times

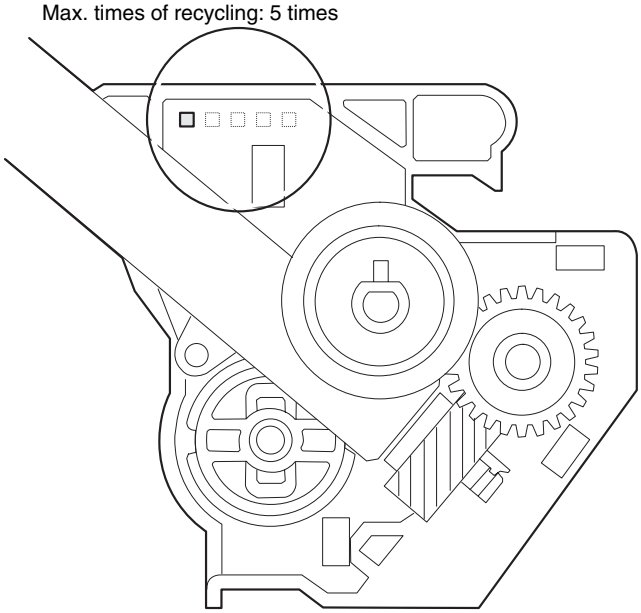

[4] EXTERNAL VIEWS AND INTERNAL STRUCTURES

1. Appearance

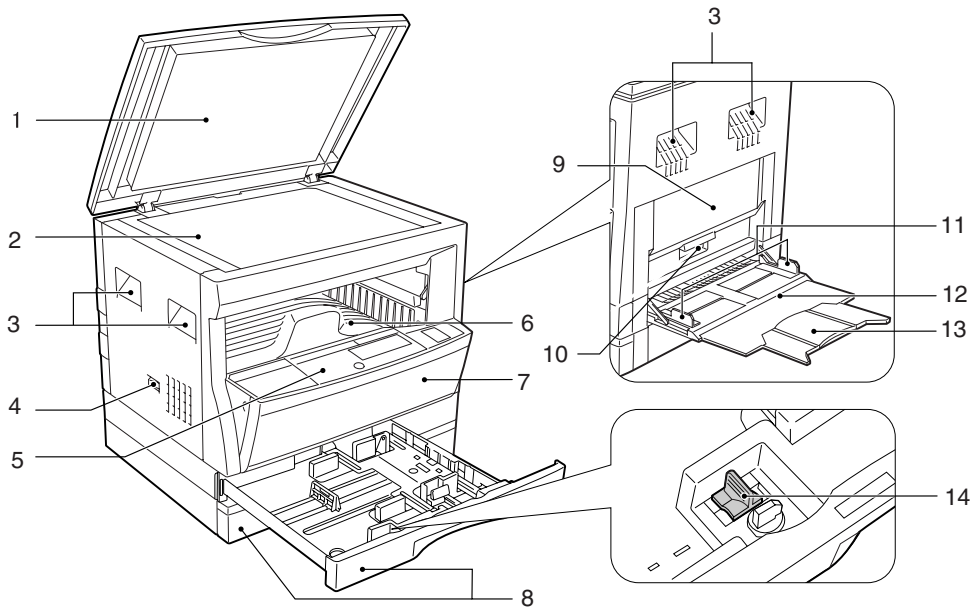

1	Original cover	2	Original table (OC table)	3	Handles
4	Power switch	5	Operation panel	6	Paper output tray
7	Front cover	8	Paper tray ∗	9	Side cover
10	Side cover handle	11	Bypass tray guides	12	Bypass tray
13	Bypass tray extension	14	Charger cleaner		

∗ The AR-160/161 are equipped with one paper tray.

2. Internal

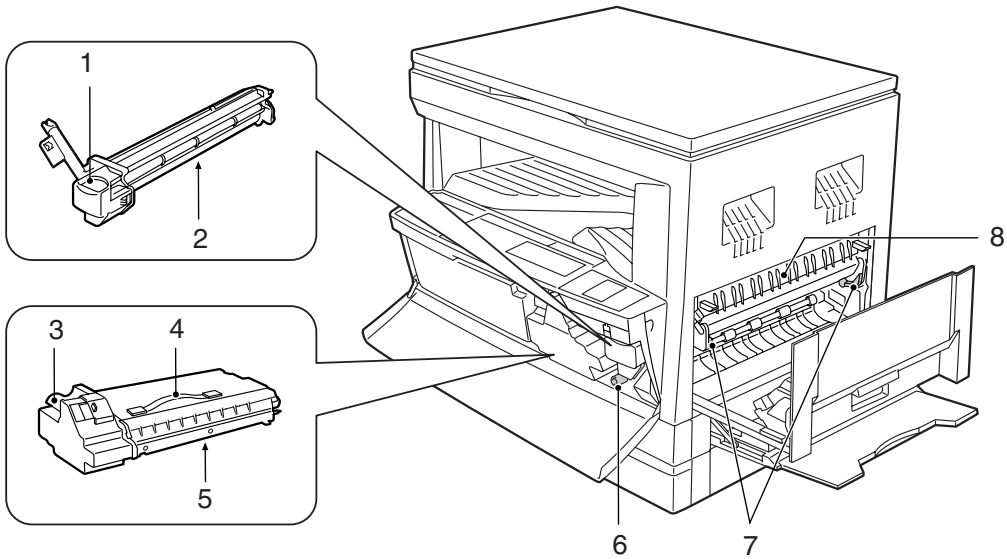

1	Drum cartridge handle	2	Drum cartridge	3	TD cartridge handle
4	TD cartridge strap	5	TD cartridge	6	Roller rotating knob
7	Fusing unit release levers	8	Paper guide		

3. Operation Section

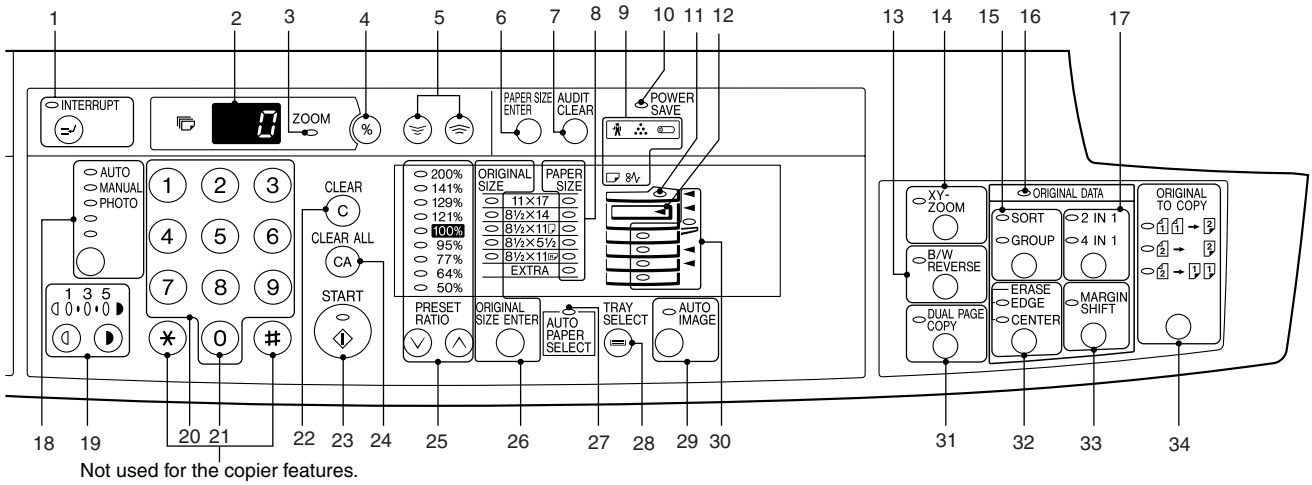

1	Interrupt key and indicator	2	Copy quantity display	3	ZOOM indicator
4	Copy ratio display key	5	Zoom keys	6	PAPER SIZE ENTER key
7	AUDIT CLEAR key	8	PAPER SIZE indicators	9	Alarm indicators ∗2
10	POWER SAVE indicator ∗1	11	SPF indicator	12	Output tray full indicator
13	B/W REVERSE key and indicator	14	XY-ZOOM key and indicator	15	SORT/GROUP key and indicators
16	ORIGINAL DATA indicator	17	2 IN 1 / 4 IN 1 key and indicators	18	AUTO/MANUAL/PHOTO key and indicators
19	Light and dark keys and indicators	20	Numeric keys	21	Zero key
22	CLEAR key	23	START key and indicator	24	CLEAR ALL key
25	PRESET RATIO selector keys and indicators	26	ORIGINAL SIZE ENTER key and indicators	27	AUTO PAPER SELECT indicator
28	TRAY SELECT key	29	AUTO IMAGE key and indicator	30	Paper feed location/misfeed location indicators
31	DUAL PAGE COPY key and indicator	32	ERASE key and indicators	33	MARGIN SHIFT key and indicator
34	Original → Copy key/Display lmap **<AR-205 only>**				

∗1

ON: Indicates that the machine is in the energy saving (pre-heat) mode.

Blink: Indicates that the machine is in the process of resetting from the energy saving mode or just after supplying the power. (During warmup)

OFF: Indicates that resetting from the energy saving mode is completed and that the fusing temperature is in ready state.

The combinations of the above display lamps are as follows:
(○ = ON, ● = OFF)

Lamp	Immediately after power ON	Ready	Copying
Pre-heat lamp	Blink	●	●
Ready lamp	○	○	●
Other lamps	○	○	○

Lamp	Energy saving mode (Pre-heating)	Energy saving mode (Auto power shut off)	Resetting from energy saving mode	Copy is started during resetting from energy saving mode
Pre-heat lamp	○	○	Blink	Blink
Ready lamp	○	●	○	●
Other lamps	○	●	○	○

∗2

Maintenance lamp
When the set count number (set by the simulation) is reached, the lamp lights up. The machine does not stop.

TD cartridge replacement required indicator
When toner density is lower than a specified level, the TONER DEVELOPER CARTRIDGE REPLACEMENT indicator lights up to warn the user.
If toner is not added after approximately 300 sheets are copied, the indicator starts blinking and machine starts to supply toner. (Toner Developer cartridge replacement indicator keeps lighting up)
If toner density is not back to specific level after two minutes, the READ indicator goes out and Toner Developer indicator starts blinking, and the copier stops.

Photoconductor cartridge replacement lamp
When the copy count reaches 29,000 after installing a Photoconductor cartridge, the lamp lights up.
When 1,000 copies are made after that, the lamp blinks instead of lighting. The machine does not stop.
Press and hold the clear key for 5 sec in the user simulation mode to display the remaining life of the photoconductor cartridge in 3 digits x 2 lines on the copy quantity display.

Paper required indicator

Misfeed indicator

4. Motor, solenoid, clutch

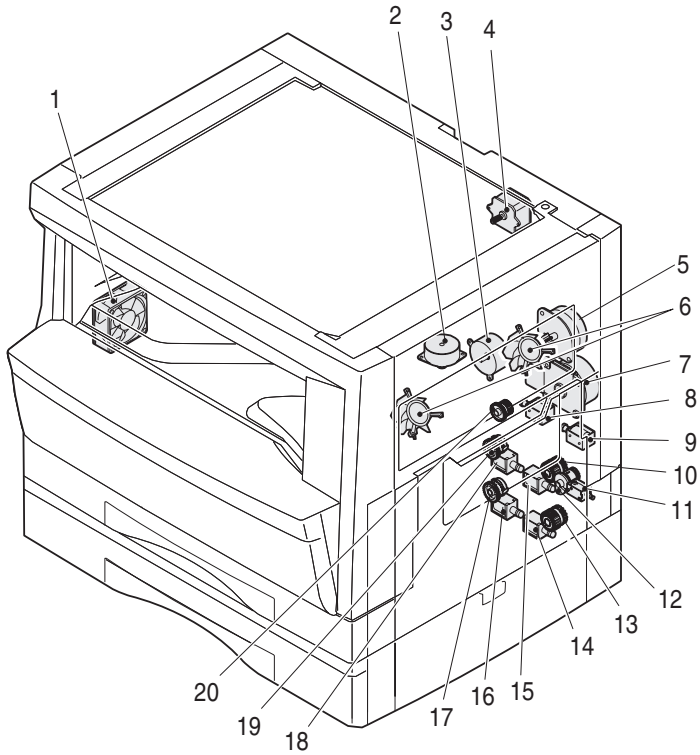

No.	Name	Code	Function, operation
1	Exhaust fan motor	VFM	Cools the inside of the machine.
2	Shifter motor	SHTM	Shifts the paper exit tray. (AR-161/200/205)
3	Toner motor	TM	Toner supply
4	Mirror motor	MRM	Drives the optical mirror base (scanner unit).
5	Duplex motor	DPX	Switchback operation and paper exit motor in duplex. (only AR-205)
6	Cooling fan motor	CFM	Cools the inside of the machine.
7	Main motor	MM	Drives the machine.
8	Paper feed solenoid	CPFS1	Solenoid for paper feed from cassette
9	Resist roller solenoid	RRS	Resist roller rotation control solenoid
10	Manual paper feed clutch	MPFC	Drives the manual paper feed roller.
11	Manual paper feed solenoid	MPFS	Manual paper feed solenoid
12	Manual paper transport clutch	MPTC	Drives the manual paper transport roller.
13	Second tray transport clutch	CPFC2	Drives the second tray transport roller.
14	Second tray transport solenoid	FSOL2	Second tray transport solenoid
15	First tray transport solenoid	FSOL1	First tray transport solenoid
16	Second tray paper feed solenoid	PSOL2	Second tray transport solenoid
17	Paper feed clutch	CPFC2	Drives the cassette paper feed roller.
18	First tray paper feed solenoid	PSOL1	First tray transport solenoid
19	First tray paper feed clutch	CPFC1	Drives the first tray transport roller.
20	PS clutch	RRC	Drives the resist roller

5. Sensor, switch

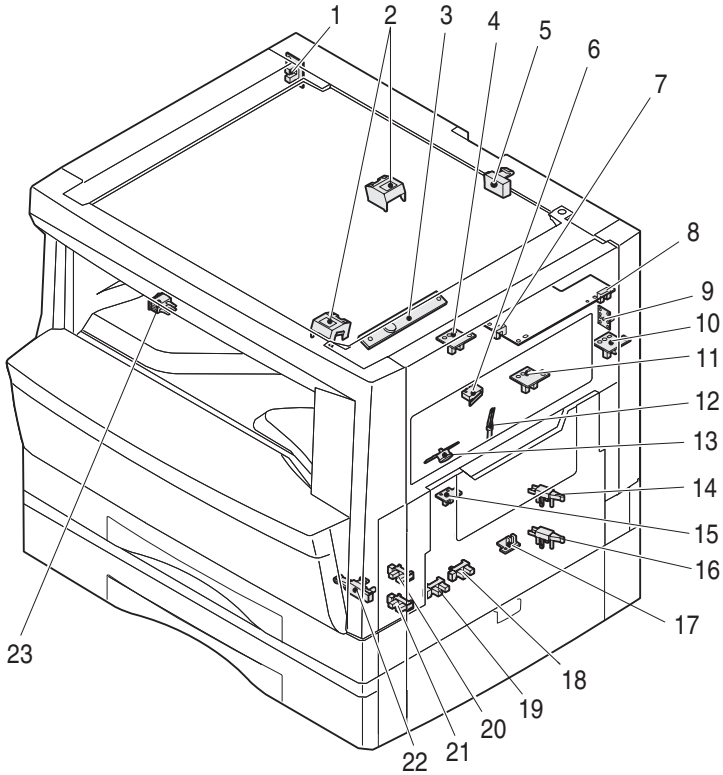

No.	Name	Code	Function, operation
1	Mirror home position sensor	MHPS	Detects the mirror (scanner unit) home position.
2	Document size sensor	DSIN	Paper size detection
3	Toner density sensor	TCS	Toner quantity detection
4	Paper exit sensor (paper exit side)	POD1	Detects paper exit.
5	OC open/close sensor	DOC COVER	
6	Right door switch	DSWR	Side door open/close detection
7	Paper full sensor	P FULL	Paper exit tray section full detection <For JOB separator>
8	Lift sensor	LFTHP	Paper feed tray lift up detection <For JOB separator>
9	Lower limit sensor	JTRAY	Job separator tray lower limit detection
10	Paper exit sensor (DUP side)	PDPX	Paper transport detection
11	Shifter home position sensor	SFTHP	Shifter home position detection
12	Thermistor	RTH	Fusing section temperature detection
13	Thermostat		Fusing section abnormally high temperature detection
14	1st tray detection switch		1st tray detection
15	Paper in	PIN	Paper transport detection
16	2nd tray detection switch		2nd tray detection
17	Manual sensor	MPED	Manual transport detection
18	Second cassette door open/close sensor	DRS2	Second cassette door open/close detection
19	Second cassette paper entry sensor	PPD2	Paper transport detection
20	First tray paper empty sensor	CSS1	First tray paper empty detection
21	Second tray paper empty sensor	CSS2	Second tray paper empty detection
22	Drum reset switch	DRST	New drum detection switch
23	Power switch	MAIN SW	Turns ON/OFF the main power source.

6. PWB unit

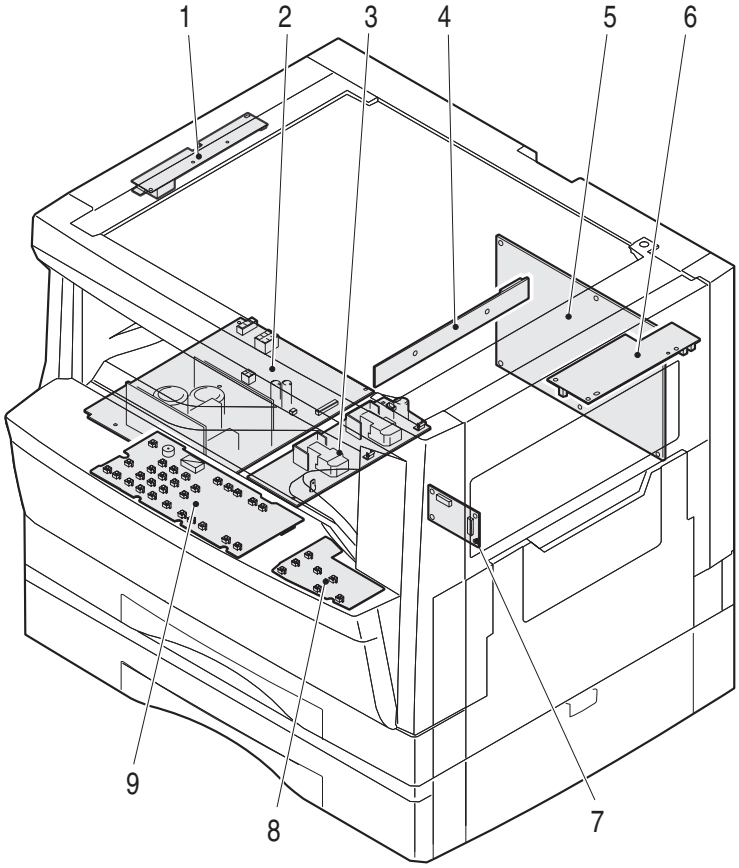

No.	Name	Function, operation
1	Copy lamp invertor PWB	Copy lamp control
2	Power PWB	AC power input/DC power control
3	High voltage PWB	High voltage control
4	CCD sensor PWB	Image scanning
5	Main PWB (MCU)	Machine control/Image process
6	Paper exit interface PWB	Paepr exit, finishing control
7	Tray interface PWB	Paper tray control
8	Electronic sort function	Operation panel input/Display
9	Operation main PWB	Operation panel input/Display, operation panel section control

7. Cross sectional view

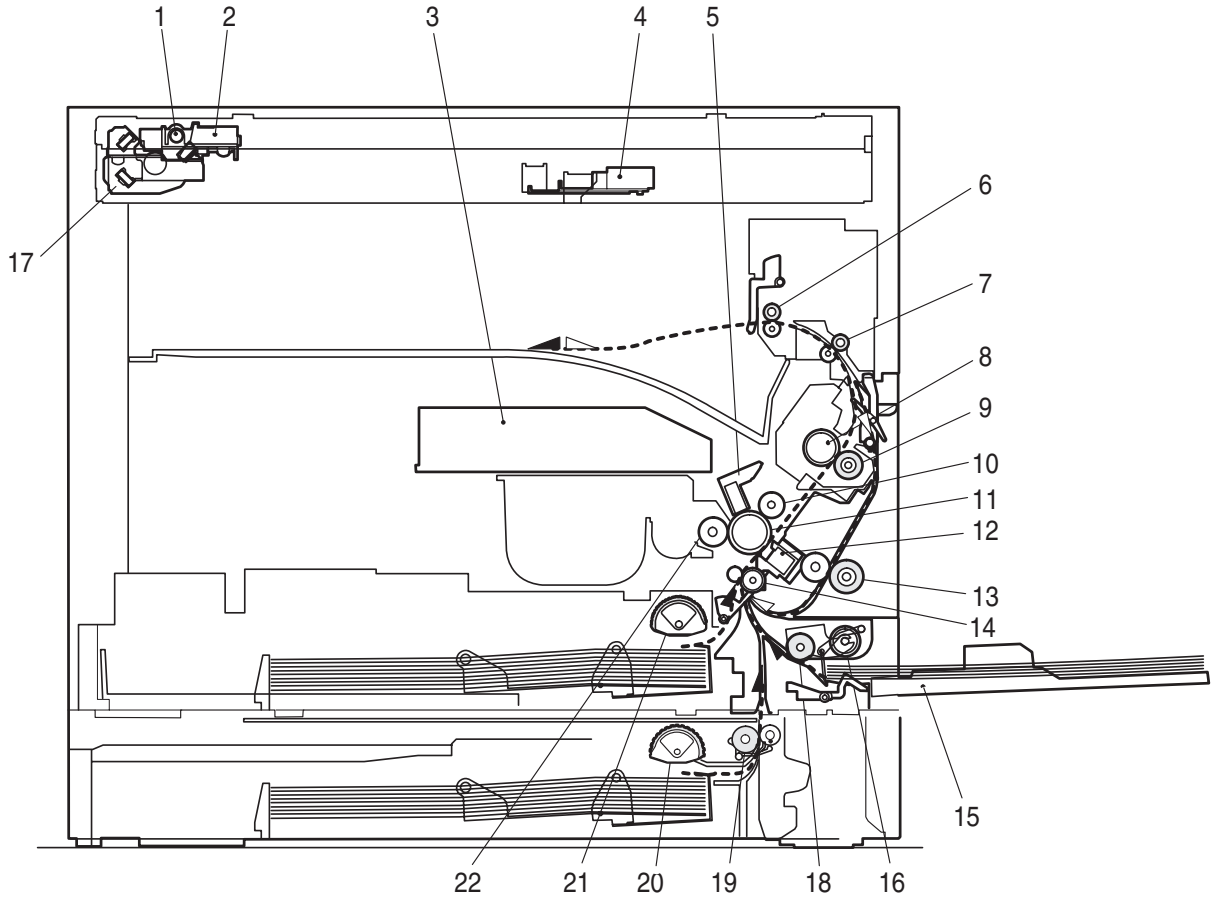

No.	Name	Function/Operation
1	Copy lamp	Image radiation lamp
2	Copy lamp unit	Operates in synchronization with No. 2/3 mirror unit to radiate documents sequentially.
3	LSU unit	Converts image signals into laser beams to write on the drum.
4	Lens unit	Reads images with the lens and the CCD.
5	MC holder unit	Supplies negative charges evenly on the drum.
6	Paper exit roller	Used to discharge paper.
7	Transport roller	Used to transport paper.
8	Upper heat roller	Fuses toner on paper (with the teflon roller).
9	Lower heat roller	Fuses toner on paper (with the silicon rubber roller).
10	Waste toner transport roller	Transports waste toner to the waste toner box.
11	Drum unit	Forms images.
12	Transfer charger unit	Transfer images (on the drum) onto paper.
13	Duplex transport roller	Transports paper for duplex (only AR-205).
14	Resist roller	Takes synchronization between the paper lead edge and the image lead edge.
15	Manual paper feed tray	Manual paper feed tray
16	Manual paper feed roller	Picks up paper in manual paper feed.
17	No. 2/3 mirror unit	Reflects the images from the copy lamp unit to the lens unit.
18	Manual transport roller	Transports paper from the manual paper feed port.
19	2nd tray paper transport roller	Transports paper from the 2nd tray.
20	2nd tray paper feed roller (semi-circular roller)	Picks up paper from the 2nd tray.
21	1st tray paper feed roller (semi-circular roller)	Picks up paper from the 1st tray.
22	MG roller	Puts toner on the OPC drum.

[5] UNPACKING AND INSTALLATION

1. Installing conditions

1) Copier installation

Do not install your copier in areas that are:

- damp, humid, or very dusty
- exposed to direct sunlight
- poorly ventilated
- subject to extreme temperature or humidity changes, e.g., near an air conditioner or heater.
- Be sure to allow the required space around the machine for servicing and proper ventilation.

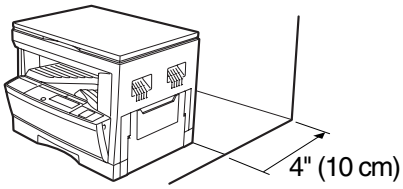

2) Power source

- Use an exclusive-use power outlet. If the power plug of this machine is inserted into a power outlet commonly used with other illumination units, flickers of the lamp may be result. Use a power outlet which is not used commonly with any illumination units.
- Avoid complex wiring.

3) Grounding wire connection.

- To avoid danger, be sure to connect a grounding wire. If no grounding wire is connected and a leakage occurs, a fire or an electric shock may be result.

2. Removal of protective material and fixing screw

1) Remove all tapes and protective material.
   - Remove all tapes, then open the document cover and remove the protective material of sheet shape
2) Remove the fixing screw.
   - Use a coin to remove the fixing screw.
   - The fixing screw is required when transporting the machine. Keep it in the tray. (Refer to the later description.)

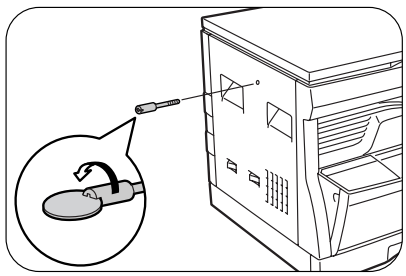

3. Installation of developing cartridge

1) Open the manual paper feed tray.

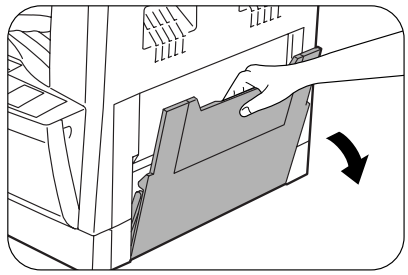

2) Lift the knob and slide the side cover gently.

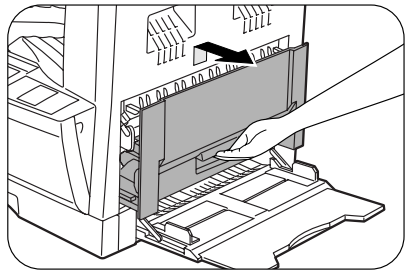

3) Open the front cover.
   - Hold the both edge gently and open the front cover.

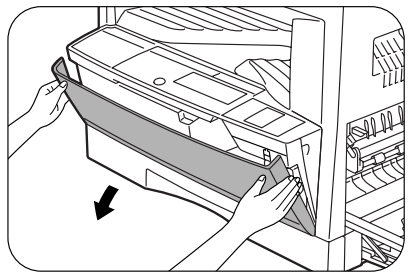

4) Remove the screw from the upper section of the insertion port of the developer cartridge.

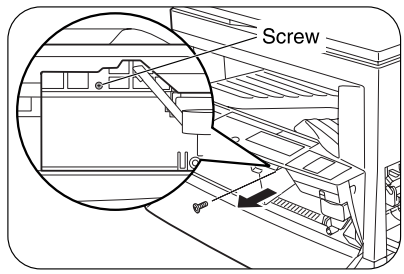

5) Shake a new developer cartridge a few times as shown.
   - Shake it horizontally as shown with the arrow.

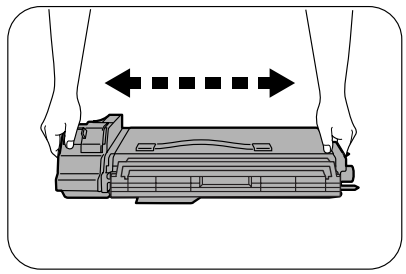

6) Remove the pawls (3 positions) of the protective cover at the rear side.

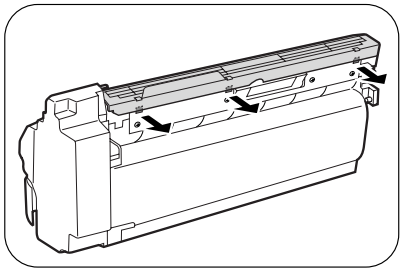

7) Remove the protective cover.
   - Pull the cover in the arrow direction to remove.

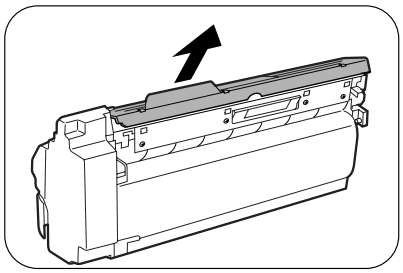

8) Insert the developer cartridge.
   - Gently insert the developer cartridge along the guide until it locks.

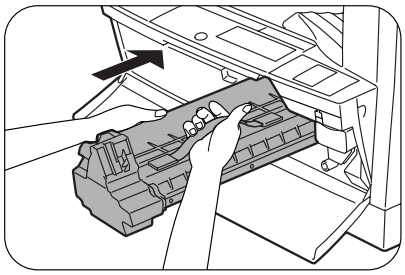

9) Fix the developer cartridge with the fixing screw which is packed together with the machine.

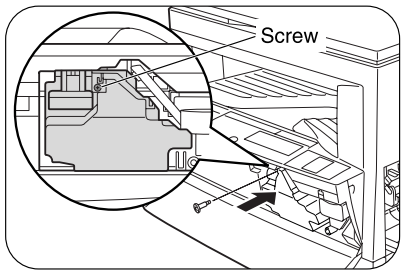

10) Close the front cover A, then close the side cover B.
   - When closing the front cover, gently press the both sides.
   - When closing the side cover, hold the knob.
   - When closing the covers, be sure to close the front cover first, then close the side cover. If closed in a wrong sequence, the covers may be broken.

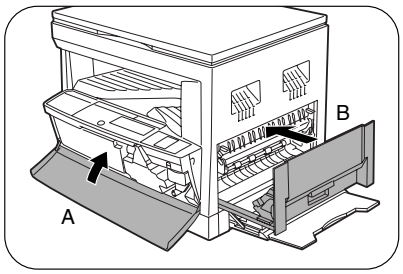

4. Removal and storage of fixing screw

1) Lift the knob and gently pull out the tray.

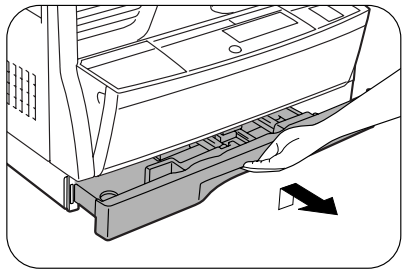

2) Hold the paper pressure plate and turn the fixing screw in the arrow direction.

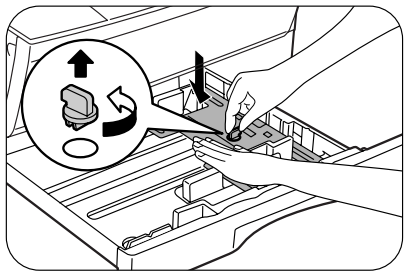

3) Store the fixing pin and the fixing screw in the tray.
   - Store the fixing screw which was removed in the above procedure 2 and the fixing screw which was removed in procedure 2 of 2.
   - Removal of protective material and fixing screw in the storage place in the tray.

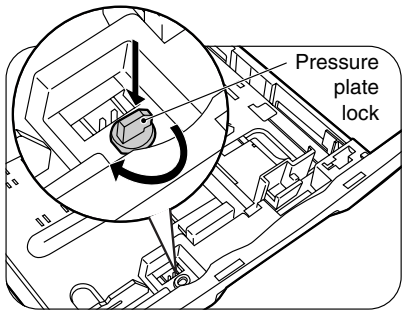

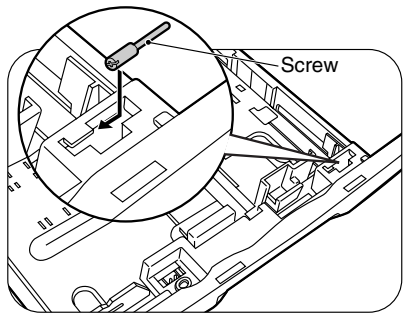

5. Changing the copy paper size in the tray

1) Gently lift and pull out the paper tray until it stops.
2) Push the pressure plate down until it locks in place.
3) Squeeze the lock lever of the front guide and slide the front guide to match the width of the paper.

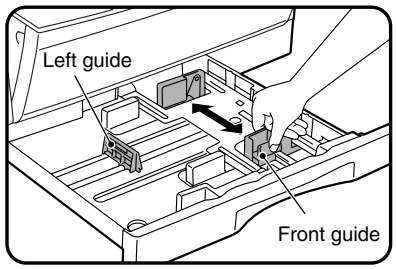

4) Move the left guide to the appropriate slot as marked on the tray.
   - When using 11" ×17" copy paper, store the left guide in the slot at the left front of the paper tray.

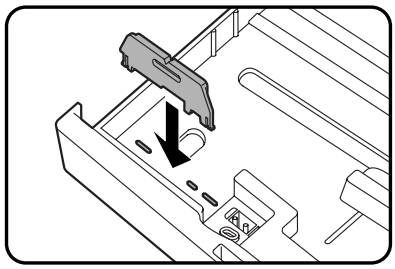

5) Load copy paper into the tray.
6) Place the paper size plate in the front of the paper tray.
   - The paper size indication which shows through the slot on the front of the copier should match the selected paper size.
7) Push the paper tray firmly back into the copier.
8) To set the selected paper size, press and hold down the PAPER SIZE ENTER key. The selected paper feed location indicator and the corresponding paper size (which has been set) indicator will blink. All other indicators will go out.
   - For paper size setting, ensure that the COPY mode has been selected. However, if printer or facsimile output is being performed, paper size setting cannot be made even in the COPY mode.

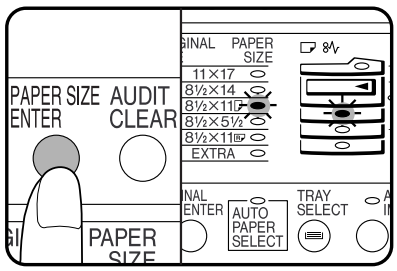

9) Use the TRAY SELECT key to select the paper tray of which the paper size has been changed.
   - Each time the TRAY SELECT key is pressed, a paper tray is indicated with a blinking paper feed location indicator. If an optional paper feed unit is not installed, this operation is not needed.

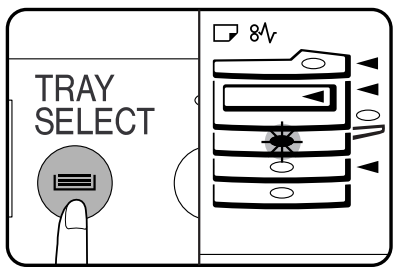

10) Use the ORIGINAL SIZE ENTER key to select the paper size which is set.
    - Each time the ORIGINAL SIZE ENTER key is pressed, a paper size will be indicated with a blinking paper size indicator.

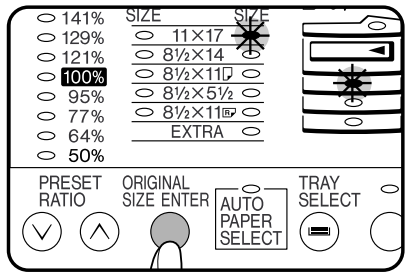

11) Press the START key and then the PAPER SIZE ENTER key.
    - To change the paper size setting of another tray, repeat steps 9 to 10 after pressing the START key.

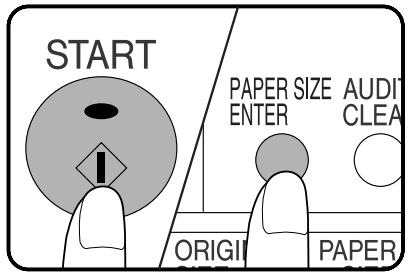

[6] ADJUSTMENTS

1. Adjustment item list

Section		Adjustment item		Adjustment procedure/SIM No.	
A	Process section	(1)	Developing doctor gap adjustment		Developing doctor gap adjustment
		(2)	MG roller main pole position adjustment		MG roller main pole position adjustment
		(3)	Developing bias voltage output adjustment		
		(4)	Main charger voltage output adjustment		
B	Mechanism section	(1)	Image lead edge position adjustment		SIM 50-1
		(2)	Main scanning direction (FR direction) distortion balance adjustment		No. 2/3 mirror base unit installing position adjustment
					Copy lamp unit installing position adjustment
		(3)	Main scanning direction (FR direction) distortion adjustment		Rail height adjustment
		(4)	Sub scanning direction (scanning direction) distortion adjustment		Winding pulley position adjustment
		(5)	Main scanning direction (FR direction) magnification ratio adjustment		SIM 48-1
		(6)	Sub scanning direction (scanning direction) magnification ratio adjustment	a	OC mode in copying (SIM 48-2)
				b	SPF mode in copying (SIM 48-5)
				c	OC mode in FAX (SIM 48-6)
				d	SPF mode in FAX (SIM 48-7)
		(7)	Off center adjustment	a	OC mode (SIM 50-13)
				b	SPF mode (SIM 50-16)
		(8)	OC (SPF) open/close detection position adjustment		OC (SPF) open/close detection position adjustment
		(9)	Document size detection sensor		SIM 41-3
C	Image density adjustment	(1)	Copy mode		SIM 46-1

2. Copier adjustment

A. Process section

(1) Developing doctor gap adjustment

1) Loosen the developing doctor fixing screw A.
2) Insert a thickness gauge of 1.5mm to the three positions at 20mm and 130mm from the both ends of the developing doctor as shown.

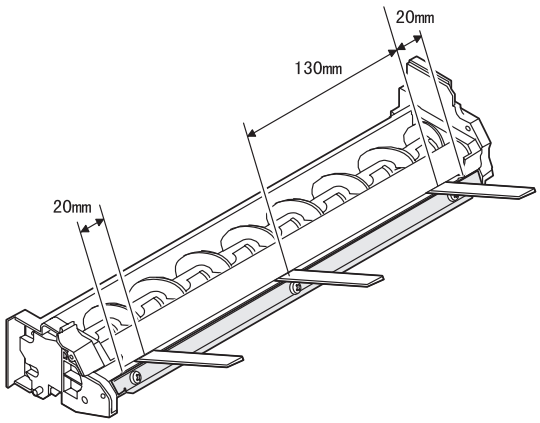

3) Push the developing doctor in the arrow direction, and tighten the developing doctor fixing screw. (Perform the same procedure for the front and the rear frames.)
4) Check the clearance of the developing doctor. If it is within the specified range, then fix the doctor fixing screw with screw lock.

* When inserting a thickness gauge, be careful not to scratch the developing doctor and the MG roller.

<Adjustment specification>

Developing doctor gap

Both ends (20mm from the both ends): $1.5^{+0.1}_{-0.15}$mm

C (Center)(150mm from the both ends): $1.55^{+0.15}_{-0.2}$mm

(2) MG roller main pole position adjustment

1) Remove and separate the waste toner box and put the developing unit on a flat surface.
2) Tie a string to a needle or a pin.
3) Hold the string and bring the needle close to the MG roller horizontally. (Do not use paper clip, which is too heavy to make a correct adjustment.) (Put the developing unit horizontally for this adjustment.)
4) Do not bring the needle into contact with the MG roller, but bring it to a position 2 or 3mm apart from the MG roller. Mark the point on the MG roller which is on the extension line from the needle tip.
5) Measure the distance from the marking position to the top of the doctor plate of the developing unit to insure that it is 18mm.
   If the distance is not within the specified range, loosen the fixing screw A of the main pole adjustment plate, and move the adjustment plate in the arrow direction to adjust.

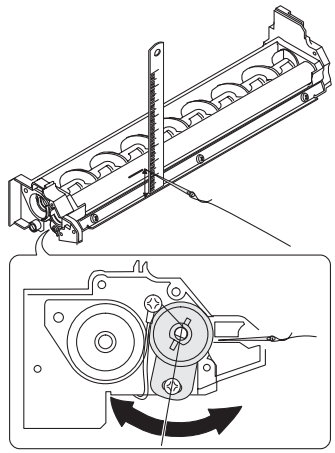

(3) Developing bias voltage adjustment

Note: • Use a digital multi-meter with an internal resistance of 10MΩ or more.

1) Set the digital multi-meter range to DC700V.
2) Put the test rod of the digital multi-meter on the developing bias voltage output check pin.
3) Turn on the power.
4) Adjust the adjustment volume VR31 so that the output voltage is within the specified range shown below.

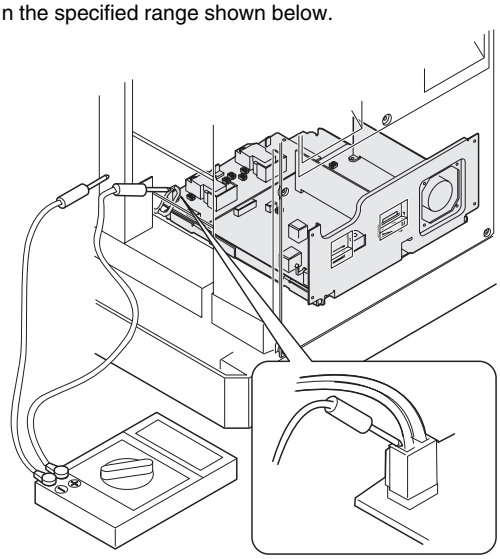

<Adjustment specification>

Mode	Specification	
Developing bias voltage	DC-400±8V	VR31

(4) Grid bias voltage adjustment

Note: • Use a digital multi-meter with an internal resistance of 10MΩ or more.

1) Set the digital multi-meter range to DC700V.
2) Put the test rod of the digital multi-meter on the grid bias voltage output check pin.
3) Turn on the power.
4) Adjust the adjustment volumes (VR51, VR52) so that the output voltage is within the specified range. (The voltage is outputted in the grid bias high output mode during warming up, and in the grid bias low output mode after completion of warming up.)

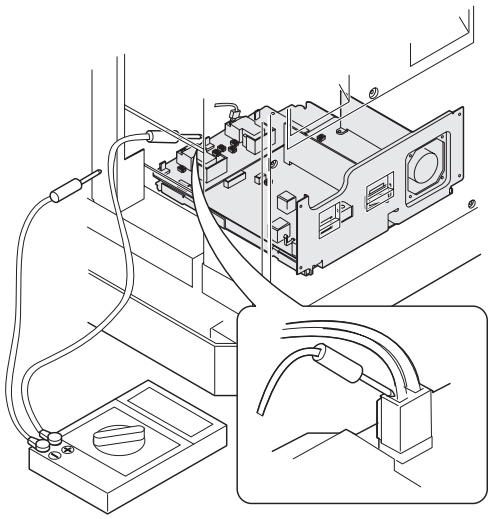

<Adjustment specification>

Mode	Specification	
Grid bias LOW	DC-400±20V	VR52
Grid bias HIGH	DC-525±10V	VR51

B. Mechanism section

(1) Image lead edge position adjustment (SIM 50-1)

a. OC image lead edge position adjustment

Note: In advance to this adjustment, the sub scanning magnification ratio adjustment must be performed.

1) Set a scale on the OC table as shown below.

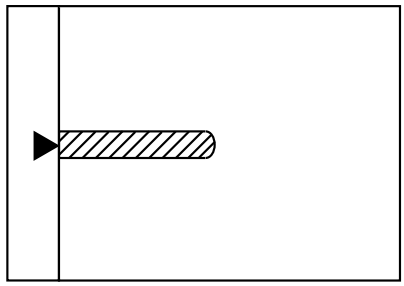

2) Make a copy.
3) Check the copy output. If necessary, perform the following adjustment procedures.
4) Execute SIM 50-1.
5) Set the OC lead edge position set value (Exposure display <AUTO> ON) to “99.”
   The OC image scanning start position is shifted inside the document edge.
6) Set the main cassette lead edge void adjustment value (Exposure display <PHOTO> ON) * to “1.”
   The lead edge void becomes the minimum.
7) Set the print start position value (Exposure display <EXP1> ON) to “99” and make a copy.
   The print start position is shifted inside the document edge.

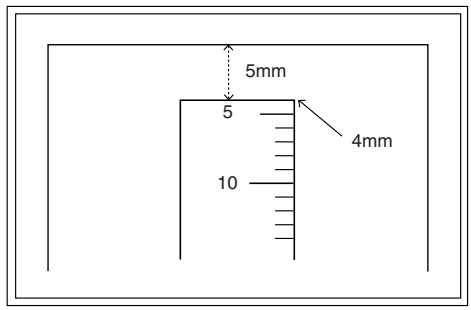

*The dimension varies depending on the model.

8) Measure the image loss R of the copied image. Enter the set value of the image scanning lead edge position (Exposure display <AUTO> ON) again.
   - 1 step of the set value corresponds to about 0.127mm shift.
   - Calculate the set value from the formula below.

   99 - R/0.127 (mm) = Image loss set value <R: Image loss measurement value (mm)>

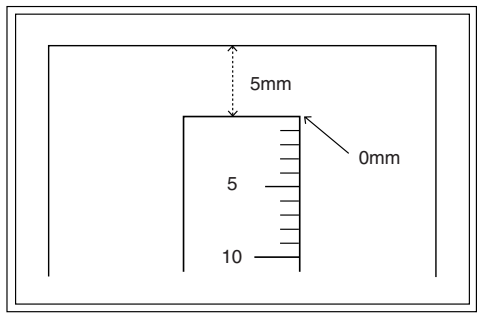

* The scanning edge is set.
(A line may be printed by scanning the document edge.)

Example: 99 - 4/0.127 = 99 - 31.5 = about 67

Note: If the set value is not obtained from the above formula, perform the fine adjustment.

9) Measure the distance H between the paper lead edge and the image print start position. Set the image print start position set value (Exposure display <EXP1> ON) again.
   - 1 step of the set value corresponds to about 0.127mm shift.
   - Calculate the set value from the formula below.

   99 - H/0.127 (mm) = Image print start position set value <H: Print start position measurement value (mm)>

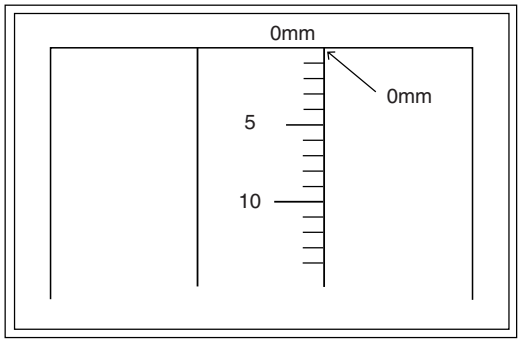

*Fit the print edge with the paper edge, and perform the lead edge adjustment.

Example: 99 - 5/0.127 = 99 - 39.4 = about 59

Note: If the set value is not obtained from the above formula, perform the fine adjustment.

10) Set the main cassette lead edge void adjustment value (Exposure display <PHOTO> ON)* again.
   - 1 step of the set value corresponds to about 0.127mm shift.
   - Calculate the set value from the formula below.

   B/0.127 (mm) = Lead edge void adjustment value <B: Lead edge void (mm)>

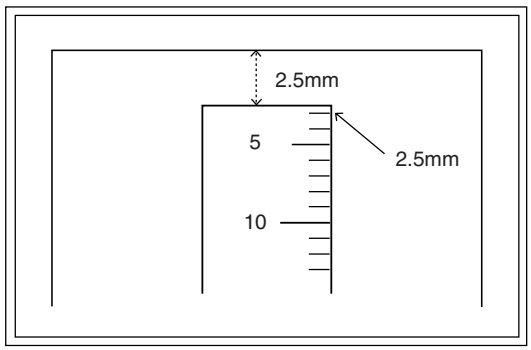

Example: When setting the lead edge void to 2.5mm:
2.5 /0.127 = about 20

Note: If the set value is not obtained from the above formula, perform the fine adjustment.

* Second cassette lead edge void adjustment: Exposure display <AUTO + MANUAL + PHOTO>
Multi bypass tray lead edge void adjustment: Exposure display <MANUAL + PHOTO>

OC second print surface (Auto duplex) lead edge position adjustment: Density display <EXP3>

OC second print surface (Auto duplex) lead edge void adjustment: Exposure display <None>

* For the adjustment procedure, set to S → D mode

Note: Before performing the second print surface lead edge position adjustment and the lead edge void adjustment, be sure to perform the first print surface lead edge position adjustment in advance, and be sure to perform the second print surface lead edge position adjustment and then the lead edge void adjustment in this sequence.

<Adjustment specification>

Adjustment mode	SIM	LED	Set value	Spec value	Set range
OC image lead edge position	SIM 50-1	AUTO	99 R/0.127	Lead edge void: 1 - 4mm Image loss: 3mm or less	1 ~ 99
Main cassette lead edge void		PHOTO	B/0.127		
Second cassette lead edge void		AUTO + MANUAL + PHOTO			
Multi bypass tray lead edge void		MANUAL + PHOTO			
Print start position		EXP1	99 – H/0.127		
OC second print surface lead edge position adjustment	SIM 50-1*	EXP 3	1 step: 0.127mm shift		
OC second print surface lead edge void adjustment		No display	1 step: 0.127mm shift		

* (Set to S → D mode for before execution)

b. SPF image lead edge position adjustment

1) Set a scale on the OC table as shown below.

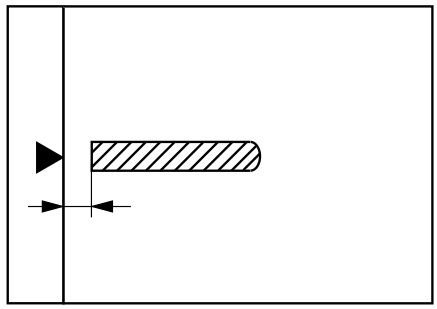

Note: Since the printed copy is used as a test chart, put the scale in paralled with the edge lines.

2) Make a copy, Then use the copy output as an original to make an SPF copy again.
3) Check the copy output. If necessary, perform the following adjustment procedures.
4) Execute SIM 50-1.
5) Set the SPF lead edge position set value (Exposure display <MANUAL> ON) so that the same image is obtained as that obtained in the previous OC image lead edge position adjustment.

<Adjustment specification>

Adjustment mode	SIM	LED	Set value	Spec value	Set range
SPF image lead edge position	SIM 50-1	MANUAL	1 step: 0.127mm shift	Lead edge void: 1 - 4mm Image loss: 3mm or less	1 ~ 99

c. Rear edge void adjustment

1) Set a scale as shown in the figure below.

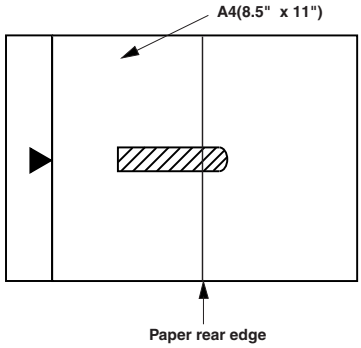

2) Set the document size to A4 (8.5" × 11"), and make a copy at 100%.
3) If necessary, perform the following adjustment procedure.

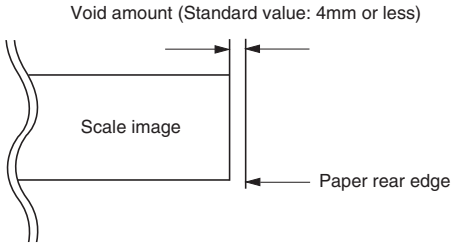

4) Execute SIM 50-1 and set the density mode to AUTO + PHOTO (Rear edge void).
   The currently set adjustment value is displayed.
5) Enter the set value and press the start key.
   The correction value is stored and a copy is made.

* Second print surface (auto duplex) rear edge void adjustment: Exposure display <EXP 5>

* Set to S → D mode before execution.

Note: Before performing the second print surface rear edge void adjustment, be sure to perform the second print surface lead edge position adjustment. Never reverse the sequence.

<Adjustment specification>

Mode	SIM	LED	Set value	Specification	Set range
Rear edge void	SIM 50-1	AUTO + PHOTO	1 step: 0.127mm shift	4mm or less	1 ~ 99
Second print surface rear edge void	SIM 50-1*	EXP 5		4mm or less	

* Set to S → D mode before execution

d. Paper off center adjustment

1) Execute SIM 50-1 and set the density mode of AUTO + MANUAL (Left edge void) to 1.
2) Set a test chart (UKOG-0089SCZZ) on the document table.
3) Select a paper feed port and make a copy.
   Compare the copy and the test chart. If necessary, perform the following adjustment procedure.
4) Execute SIM 50-10.
   After completion of warmup, shading is performed and the currently set off center adjustment value of each paper feed port is displayed.
5) Enter the set value and press the start key.
   The correction value is stored and a copy is made.

* Second print surface (auto duplex) off-center adjustment: Exposure display: None

<Adjustment specification>

Mode	SIM	LED	Set value	Specification	Set range
Paper off center	SIM 50-10	Selected tray ON	Add 1: 0.127mm shift to R side. Reduce 1: 0.127mm shift to L side.	Single: Center ±2.0mm	1 ~ 99
Second print surface off-center	SIM 50-10	No display		Duplex: Center ±2.5mm	

* When SIM 48-01 (AE) is executed, the document off-center is automatically set. Therefore, the off-center adjustment previously described in 5) must be adjusted again.

e. Left edge void area adjustment

Note: Before performing this adjustment, be sure to check that the paper off center adjustment (SIM 50-10) is completed.

1) Set a test chart (UKOG-0089SCZZ) on the document table.
2) Select a paper feed port and make two copies.
   Compare the second copy and the test chart. If necessary, perform the following adjustment procedure.

* The first copy does not show the void. Be sure to check the second copy.

3) Execute SIM 50-1 and set the density mode to AUTO + MANUAL (Left edge void).
   The currently set adjustment value is displayed.
   (When the off center adjustment previously described is performed, "0" is displayed.)
4) Enter the set value and press the start key.
   The correction value is stored and a copy is made.

<Adjustment specification>

Mode	SIM	LED	Set value	Specification	Set range
Left edge void	SIM 50-1	AUTO + MANUAL	1 step: 0.127mm shift	0.5 ~ 4mm	1 ~ 99

* When the left edge void is set with the paper off center adjusted, the both edge void is automatically adjusted.

(2) Main scanning direction (FR directional distortion balance adjustment)

1) Remove the OC glass and the right cabinet.

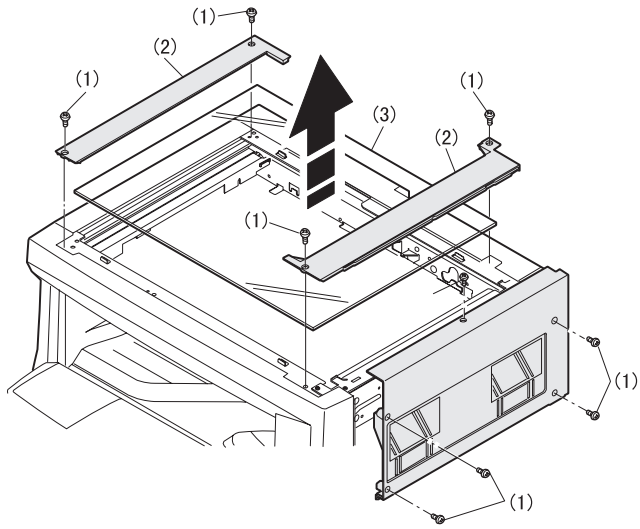

2) Loosen the copy lamp unit wire fixing screw.

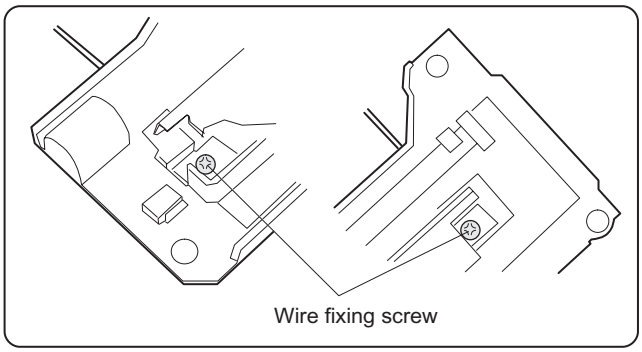

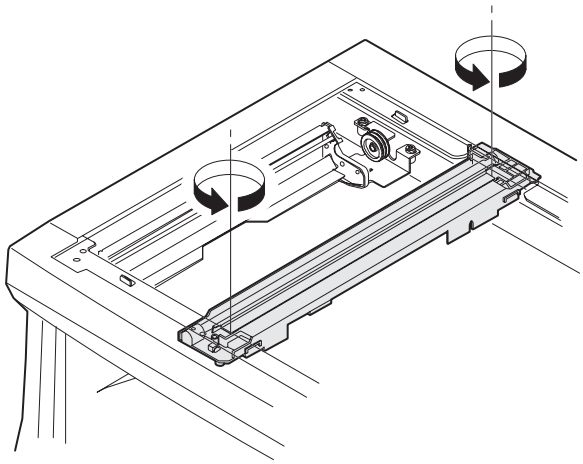

3) Manually turn the mirror base drive pulley and bring No. 2/3 mirror base unit into contact with the positioning plate.

   At that time, if the front frame side and the rear frame side of No. 2/3 mirror base unit are brought into contact with the positioning plate at the same time, the mirror base unit parallelism is proper.

   If one of them is in contact with the positioning plate, perform the adjustment of 4).

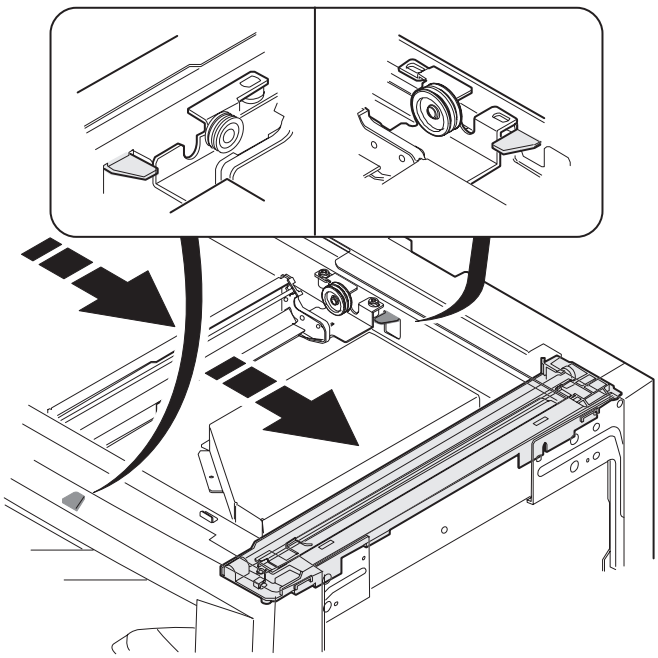

4) Loosen the set screw of the scanner drive pulley which is not in contact with No. 2/3 mirror base unit positioning plate.

5) Without moving the scanner drive pulley shaft, manually turn the scanner drive pulley until the positioning plate is brought into contact with No. 2/3 mirror base unit, then fix the scanner drive pulley.

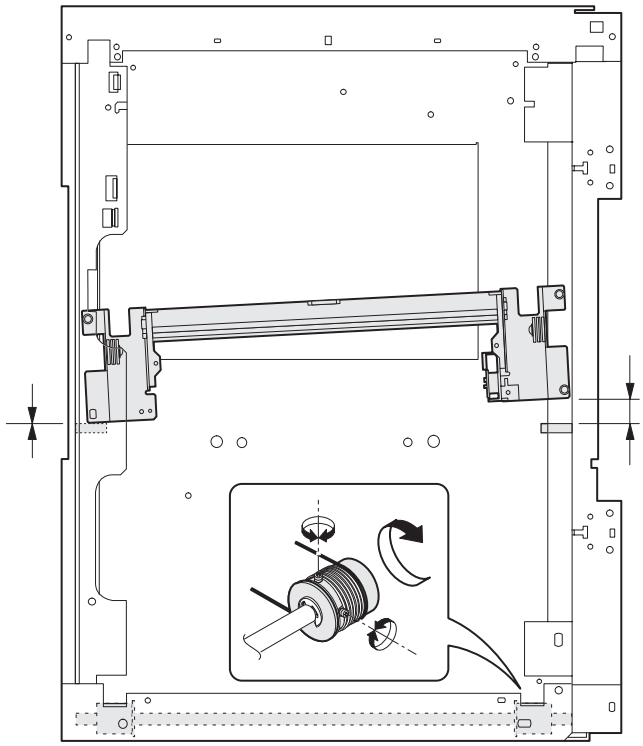

6) Put No. 2/3 mirror base unit on the positioning plate again, push the projections on the front frame side and the rear frame side of the copy lamp unit to the corner frame, and tighten the wire fixing screw.

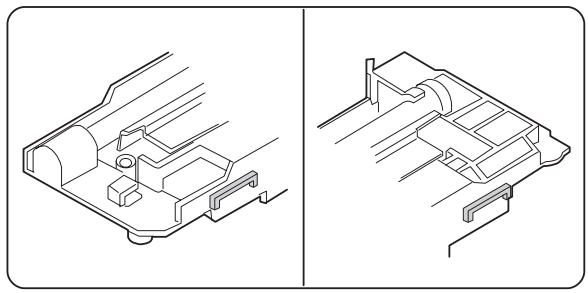

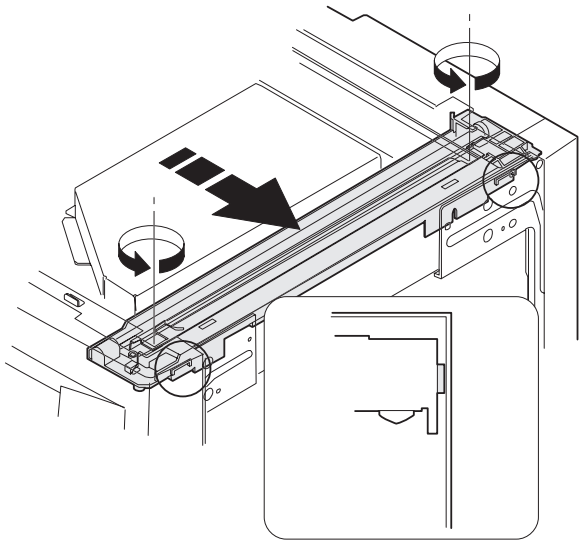

(3) Main scanning direction (FR direction) distortion adjustment

This adjustment must be performed in the following cases:

- When the mirror base drive wire is replaced.
- When the lamp unit, or No. 2/3 mirror holder is replaced.
- When a copy as shown is made.

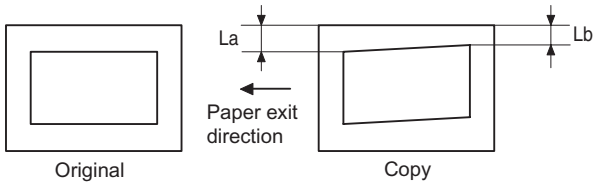

1) Set A3 (11" x 17") white paper on the original table as shown below.

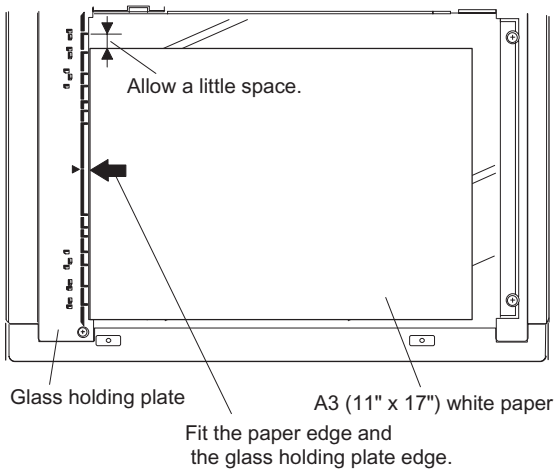

2) Open the original cover and make a normal (100%) copy.
3) Measure the width of the black background at the lead edge and at the rear edge.

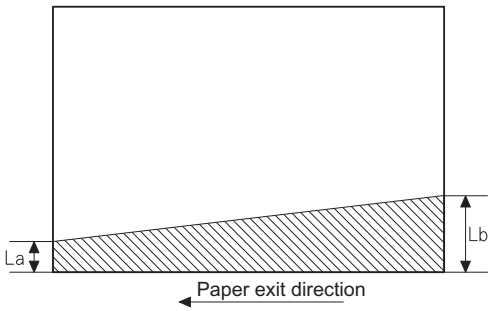

La: Lead edge black background width
Lb: Rear edge black background width

If the width (La) of the black background at the lead edge is equal that (Lb) at the rear edge, there is no need to execute the following procedures of 4) ~ 7).

4) Loosen the mirror base drive pulley fixing screw on the front frame side or on the rear frame side.

- When La < Lb
  Turn the mirror base drive pulley on the front frame side in the arrow direction A. (Do not move the mirror base drive pulley shaft.)
- When La > Lb
  Turn the mirror base drive pulley on the front frame side in the arrow direction A. (Do not move the mirror base drive pulley shaft.)

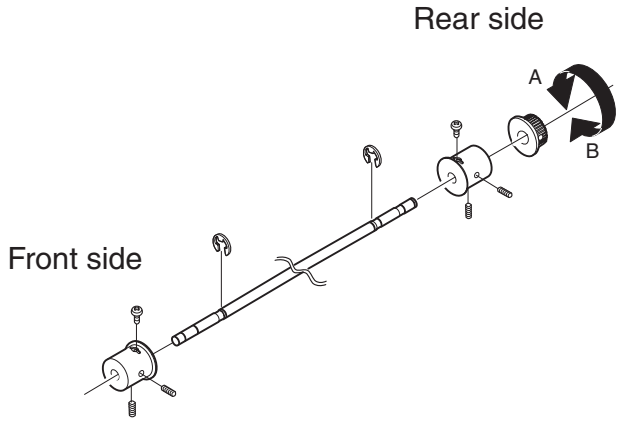

5) Tighten the mirror base drive pulley fixing screw.

<Adjustment specification>

La = Lb

6) Execute the main scanning direction (FR) distartion balance adjustment previously described in 2) again.

(4) Sub scanning direction (scanning direction) distortion adjustment

When there is no skew copy in the mirror base scanning direction and there is no horizontal error (right angle to the scanning direction), the adjustment can be made by adjusting the No. 2/3 mirror base unit rail height.

Before performing this adjustment, be sure to perform the horizontal image distortion adjustment in the laser scanner section.

This adjustment must be performed in the following cases:

- When the mirror base wire is replaced.
- When the copy lamp unit or No. 2/3 mirror unit is replaced.
- When the mirror unit rail is replaced or moved.
- When a following copy is made.

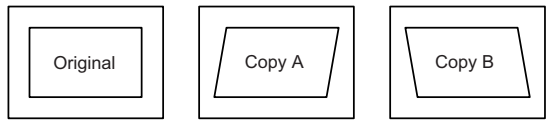

1) Making of a test sheet

Make test sheet by drawing parallel lines at 10mm from the both ends of A3 (11" x 17") white paper as shown below. (These lines must be correctly parallel to each other.)

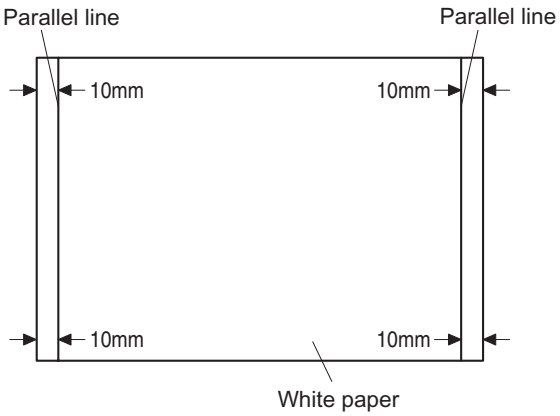

2) Make a normal (100%) copy of the test sheet on A3 (11" x 17") paper. (Fit the paper edge with the glass holding plate edge.)
3) Measure the distances (La, Lb, Lc, Ld) at the four corners as shown below.

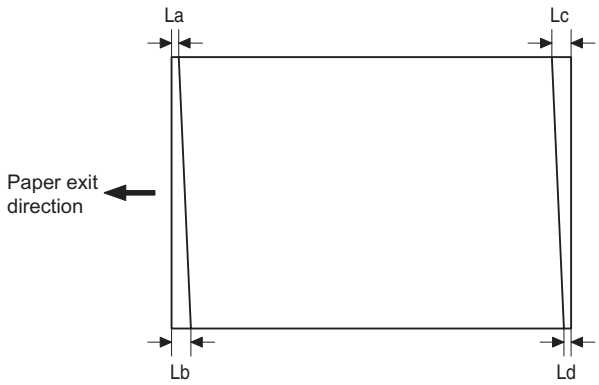

When La = Lb and Lc = Ld, no need to perform the procedures 4) and 5).

4) Move the mirror base B rail position up and down (in the arrow direction) to adjust.

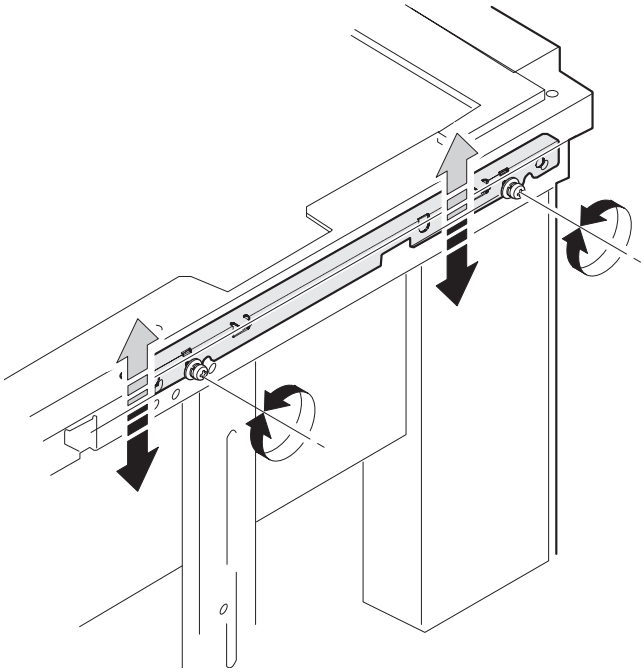

- When La > Lb
  Shift the mirror base B rail upward by the half of the difference of La – Lb.
- When La < Lb
  Shift the mirror base B rail downward by the half of the difference of Lb – La.
  Example: When La = 12mm and Lb = 9mm, shift the mirror base B rail upward by 1.5mm.
- When Lc > Ld
  Shift the mirror base B rail downward by the half of the difference of Lc – Ld.
- When Lc < Ld
  Shift the mirror base B rail downward by the half of the difference of Ld – Lc.

* When moving the mirror base rail, hold the mirror base rail with your hand.

<Adjustment specification>

La = Lb, Lc = Ld

5) After completion of adjustment, manually turn the mirror base drive pulley, scan the mirror base A and mirror base B fully, and check that the mirror bases are not in contact with each other.

* If the mirror base rail is moved extremely, the mirror base may be in contact with the frame or the original glass. Be careful to avoid this.

(5) Main scanning direction (FR direction) magnification ratio adjustment (SIM 48-1)

Note: Before performing this adjustment, be sure to check that the CCD unit is properly installed.

1) Put a scale on the original table as shown below.

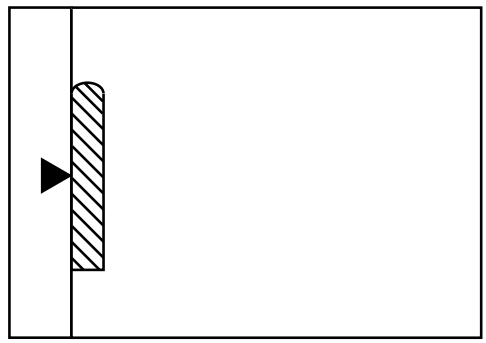

2) Execute SIM 48-1.
3) After warmup, shading is performed and the current set value of the main scanning direction magnification ratio is displayed on the display section in 2 digits.
4) Select the mode and press the start key again.
5) Auto correction mode (AE lamp ON)

   The mirror unit moves to the shading position, and the reference width of the reference white plate is scanned, and the correction value is automatically calculated from that scanned value.

   The correction value is displayed and a copy is made.
6) Compare the scale image and the actual scale.

   If a fine adjustment is required, switch to the manual correction mode with the magnification ratio display key and perform fine adjustment.
7) Manual correction mode (TEXT lamp ON)

   Enter the set value and press the start key.

   The set value is stored and a copy is made.

<Adjustment specification>

Note: A judgement must be made with 200mm width, and must not be made with 100mm width.

Mode	Specification	SIM	Set value	Set range
Main scanning direction magnification ratio	At normal: ±1.0%	SIM 48-1	Add 1: 0.1% increase Reduce 1: 0.1% decrease	1 ~ 99

- Error in the auto correction mode

Display	Content	Major cause
Copy quantity display "– –"	The correction value calculated is over 5%.	• Improper position of reference width line of the reference white plate • Improper installation of CCD unit
Paper jam lamp ON	Reference line scanning error	• Defective CCD • No reference white plate

* When SIM 48-01 (AE) is executed, the main scanning direction magnification ratio is automatically set. Therefore, the main scanning direction magnification ratio adjustment previously described in 5) must be made again.

(6) Sub scanning direction (scanning direction) magnification ratio adjustment (SIM 48-2, SIM 48-5)

a. OC mode in copying

Note: • Before performing this adjustment, be sure to check that the CCD unit is properly installed.

1) Put a scale on the original table as shown below, and make a normal (100%) copy.

2) Compare the scale image and the actual image. If necessary, perform the following adjustment procedures.
3) Execute SIM 48-2.
4) After warmup, shading is performed and the current set value of the sub scanning direction magnification ratio is displayed on the display section in 2 digits.
5) Enter the set value and press the start key.
The set value is stored and a copy is made.

<Adjustment specification>

Mode	Specification	SIM	Set value	Set range
Sub scanning direction magnification ratio (OC mode)	Normal ±1.0%	SIM 48-2	Add 1: 0.1% increase Reduce 1: 0.1% decrease	1 ~ 99

b. RSPF sub scanning direction magnification ratio

Note: • Before performing this adjustment, be sure to check that the CCD unit is properly installed.
• Before performing this adjustment, the OC mode adjustment in copying must be completed.

1) Put a scale on the original table as shown below, and make a normal (100%) copy to make a test chart.

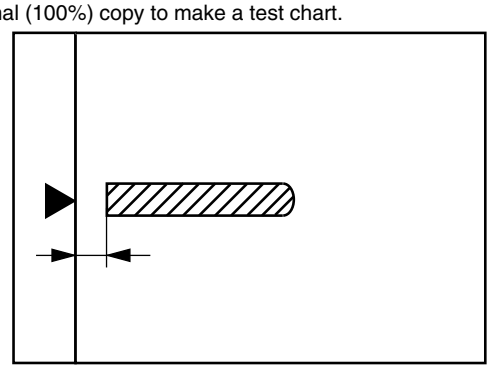

Note: Since the printed copy is used as a test chart, put the scale in parallel with the edge lines.

2) Set the test chart on the SPF and make a normal (100%) copy.
3) Compare the scale image and the actual image. If necessary, perform the following adjustment procedures.
4) Execute SIM 48-5.
5) After warmup, shading is performed.
The auto density lamp lights up and the current front surface sub scanning direction magnification ratio correction value is displayed in two digits on the display section.
6) Enter the set value and press the start key.
The set value is stored and a copy is made.
7) Change the mode from the duplex original mode to the simplex original mode.
"MANUAL" lamp lights up and the current back surface sub scanning direction magnification ratio is displayed in two digits on the display section.
8) Enter the set value and press the start key.
The set value is stored and a copy is made.

<Adjustment specification>

Mode	Specification	SIM	Set value	Set range
Sub scanning direction magnification ratio (SPF mode)	Normal ±1.0%	SIM 48-5	Add 1: 0.1% increase Reduce 1: 0.1% decrease	1 ~ 99

(7) Off center adjustment (SIM 50-13, SIM 50-16)

a. OC mode

Note: • The operation of SIM 50-13 is the same as that of SIM 48-01 (Photo LED ON)

1) Make a test chart as shown below and set it so that its center line is fit with the original guide center mark.
* To make a test chart, draw a line on A3 or 11" x 17" paper at the center in the paper transport direction.

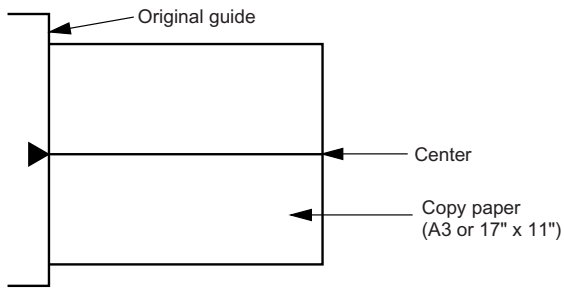

2) Make a normal copy from the manual paper feed tray, and compare the copy and the test chart.
If necessary, perform the following adjustment procedures.
3) Execute SIM 50-13.
4) After warmup, shading is performed and the current set value of the off center adjustment is displayed on the display section in 2 digits.
5) Enter the set value and press the start key.
The set value is stored and a copy is made.

<Adjustment specification>

Mode	Specification	SIM	Set value	Set range
Original off center mode (OC mode)	Single: Center ± 2.0mm Duplex: Center ±2.5mm	SIM 50-13	Add 1: 0.1mm shift to R side Reduce 1: 0.1mm shift to L side	1 ~ 99

b. SPF original off-center adjustment

Note: • Before performing this adjustment, be sure to check that the paper off center is properly adjusted.

1) Make a test chart for the center position adjustment and set it on the SPF.

<Adjustment specification>

Draw a line on a paper in the scanning direction.

2) Make a normal copy from the manual paper feed tray, and compare the copy and the original test chart.
   If necessary, perform the following adjustment procedures.
3) Execute SIM 50-16.
4) After warmup, shading is performed and the current set value of the off center adjustment at each paper feed port is displayed on the display section in 2 digits.
5) Enter the set value and press the start key.
   The set value is stored and a copy is made.

<Adjustment specification>

Mode	Specification	SIM	Set value	Set range
Original off center mode (SPF mode)	Single: Center ± 3.0mm	SIM 50-16	Add 1: 0.1mm shift to R side Reduce 1: 0.1mm shift to L side	1 ~ 99
	Duplex: Center ±3.5mm			

(8) OC (SPF) open/close detection position adjustment

1) Set A4 or 8 1/2" × 11" paper on the OC table.
   Check that the document size display on the operation panel indicates the correct size of the set paper.
2) Close the OC (SPF) with a small clearance for insertion of your hand left, and remove the paper from the OC table.
   The document size display does not change from the display in 1).
3) Open the OC (SPF) slowly until the display on the operation panel changes (all the document size display lamps are turned off), and measure dimension A shown below under that state.

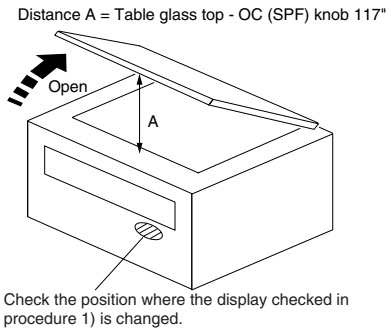

<Spec value>

OC (SPF) open/close position A: 207 ~ 302mm

4) If the OC (SPF) open/close position A is not 207 ~ 302mm, adjust the open/close sensor mounting plate position as shown below.

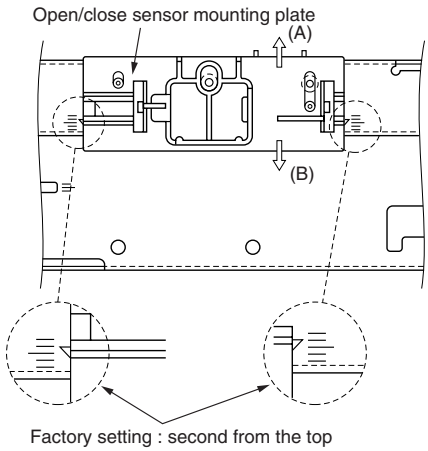

(9) Original sensor adjustment (SIM 41-3) <Other than AR-160>

1) Execute SIM 41-2.
2) Set A3 (11" x 17") paper on the OC table.
3) Press the start key again.
4) The sensor level of the original sensor is automatically checked and the value with an original - 40 is made as the threshold value for scanning. (Automatic setting)
5) Execute SIM 41-3.
6) The light reception level of the original sensor is displayed.
   (The mode selection is made with the magnification ratio display key.)
   The first digit of the copy quantity display shows "A": Light reception level display
   The first digit of the copy quantity display shows "b": Original judgement level display
7) By changing the paper set on the original table, the original size LED sensed by the sensor is lighted.

C. Image density adjustment

(1) Copy mode (SIM 46-1)

1) Set a test chart (UKOG-0162FCZZ) on the OC table as shown below.

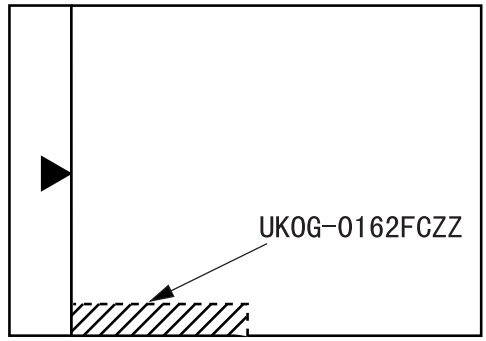

2) Put several sheets of A3 or 11" x 17" white paper on the test chart.
3) Execute SIM 46-1.
4) After warmup, shading is performed and the current set value of the density level is displayed on the display section in 2 digits.
   For mode selection, use the density select key.
5) Change the set value with the 10-key to adjust the copy image density.
6) Make a copy and check that the specification below is satisfied.

<Adjustment specification>

Density mode	Display lamp	Exposure level	Sharp Gray Chart output	Set value	Set range
Auto	Auto	—	"3" is slightly copied.	The greater the set value is, the greater the density is. The smaller the set value is, the smaller the density is.	1 ~ 99
Manual	Manual	3	"3" is slightly copied.		
Photo	Photo	3	"3" is slightly copied.		
Toner save	Manual/ Photo	3	"3" is slightly copied.		

[7] SIMULATIONS

1. Entering the simulation mode

Perform the following procedure to enter the simulation mode.
Clear key → Interrupt key → "0" key → Interrupt key → Main code → Start key → Sub code → Start key

2. Cancelling the simulation mode

When the clear all key is pressed, the simulation mode is cancelled. When the interruption key is pressed, the process is interrupted and the screen returns to the sub code entering display.

* After canceling the simulation mode, be sure to turn OFF/ON the power and check the operation.

3. List of simulations

Main code	Sub code	Contents	*
1	1	Mirror unit operation check	
	2	Optical system sensor operation check	
2	1	SPF aging	B
	2	SPF sensor operation check	B
	3	SPF motor forward rotation operation check	B
	4	SPF motor reverse rotation operation check	B
	8	SPF paper feed solenoid operation check	B
	9	RSPF reverse solenoid operation check	B
	10	RSPF paper exit gate solenoid operation check	B
	11	SPF PS release solenoid operation check	B
3	2	Shifter job separator sensor operation check	DB
	3	Shifter operation check	D
	4	Job separator operation check	B
	11	Shifter Home Position Check	
5	1	Operation panel display check	
	2	Heater lamp lighting check, cooling fan motor operation check	
	3	Copy lamp lighting check	
6	1	Paper feed solenoid operation check	
	10	Main cassette semi-circular roller drive	
7	1	Aging with warmup time display	
	4	Warmup saving	
	6	Intermittent aging	
	8	Warmup time display	
9	1	Duplex motor forward rotation operation check	C
	2	Duplex motor reverse rotation operation check	C
	4	Duplex motor rotation speed adjustment	C
	5	Duplex motor switchback time adjustment	C
10		Toner motor operation check	
14		Trouble (except for U2) cancel	
16		U2 trouble cancel	
20	1	Maintenance counter clear	
21	1	Maintenance cycle setting	
	2	Mini maintenance cycle setting (Japan only)	A
22	1	Maintenance counter display	
	2	Maintenance preset value display	
	3	JAM memory display	
	4	Total JAM counter display	
	5	Total counter display	
	6	Developing counter display	
	7	Developing preset counter value display (Japan only)	A
	8	SPF counter display	B
	9	Paper feed counter display	
	12	Drum counter display	
	14	Copier ROM version display	
	15	Trouble memory display	
22	16	Duplex print counter display	C
	17	Copy counter display	
	18	Printer counter display	B
	19	Electronic sort counter display	B
	20	FAX print counter display	B
	21	Scanner counter display	
24	1	JAM memory, JAM counter clear	
	2	Trouble memory clear	
	4	SPF counter clear	B
	5	Duplex counter clear	C
	6	Paper feed counter clear	
	7	Drum counter clear	
	8	Copy counter clear	
	9	Printer counter clear	B
	10	Electronic sort counter clear	B
	11	FAX print counter clear	B
	13	Scanner counter clear	
25	1	Main motor operation check	
	10	Polygon motor operation check	
26	1	Option switch display	
	3	Auditor setting	
	5	Counter mode setting	
	6	Destination setting	
	10	Model name setting	
	22	Language setting	
	30	CE mark conformity control setting	A
	32	Fan rotation duty change state setup	
	38	Cancel of stop at dram life over	
	42	Transfer timing adjustment	
	50	Black-white reversion function setup	
	51	Sort/Group copy temporary stop function setup	B
30	1	Machine sensor operation check	
41	2	OC document sensor adjustment	D
	3	Document sensor light reception level display	D
42	1	Developing counter clear	
43	1	Fusing temperature setting	
46	1	Copy density level adjustment	
48	1	Main scanning (front/rear) direction magnification ratio adjustment (Copy/FAX/OC-SPF common)	
	2	OC mode sub scanning direction magnification ratio adjustment in copying	
	5	SPF mode sub scanning direction magnification ratio adjustment in copying	B
	6	OC mode sub scanning direction magnification ratio adjustment in FAX	B
	7	SPF mode sub scanning direction magnification ratio adjustment in FAX	B
50	1	Copy image lead edge position adjustment	
	10	Paper off center adjustment	
	13	OC mode document off center adjustment	
	16	SPF mode document off center adjustment	B
	18	Duplex memory reverse print adjustment	B
	19	Duplex rear edge void adjustment	B
51	2	Resist amount adjustment	
63	1	Shading data check	
64	1	Self printing mode	
67	14	Printer Flash ROM Data Download	B

*A: Not used in the AR-160/161/200/205.
B: Only when an option is installed.
C: AR-205 only
D: Other than AR160/161

4. Contents of simulations

<table>
<tr><th>Main code</th><th>Sub code</th><th>Contents</th><th>Details of operation</th><th>Initial value</th><th>Set range</th></tr>
<tr><td>1</td><td>1</td><td>Mirror unit operation check</td><td>Used to execute scanning at the speed corresponding to the set magnification ratio.
<table>
<tr><th>Key operation</th><th>Display</th></tr>
<tr><td>Changing the magnification ratio:
Fixed magnification ratio key
ZOOM UP KEY, ZOOM DOWN KEY</td><td>Set magnification ratio:
Fixed magnification ratio LED
ZOOM LED</td></tr>
</table></td><td>100%</td><td>50 ~ 200%</td></tr>
<tr><td></td><td>2</td><td>Optical system sensor operation check</td><td>Used to check MHPS (Mirror home position sensor) ON/OFF state with the LED on the operation panel.
<table>
<tr><th>Display</th></tr>
<tr><td><Lighting when the sensor is ON>
MHPS: Paper empty LED</td></tr>
</table></td><td></td><td></td></tr>
<tr><td>2</td><td>1</td><td>SPF aging

<Only when an option is installed></td><td>Used to perform SPF document transport.
The paper size is not detected. (Excluding postcards, extra large sheet of 1m or greater.)
With SPF installed: Single transport operation
With RSPF installed: Duplex transport operation
<table>
<tr><th>Key operation</th><th>Display</th></tr>
<tr><td>Changing the magnification ratio:
Fixed magnification ratio key
ZOOM UP KEY, ZOOM DOWN KEY</td><td>Set magnification ratio:
Fixed magnification ratio LED
ZOOM LED</td></tr>
</table></td><td>100%</td><td>50 ~ 200%</td></tr>
<tr><td></td><td>2</td><td>SPF sensor operation check

<Only when an option is installed></td><td>Used to check sensors in SPF with the LED on the operation panel.
<table>
<tr><th>Display</th></tr>
<tr><td><Lighting at sensor ON>
PW1: JAM LED
PW2: Paper empty LED
PW3: Machine position JAM LED
PW4: SPF JAM LED
PL1: Manual paper feed tray select LED
PL2: Second cassette position JAM LED
P-IN: SPF select LED
SPF COVER OPEN: Main cassette select LED</td></tr>
</table></td><td></td><td></td></tr>
<tr><td></td><td>3</td><td>SPF motor forward rotation operation check
<Only when an option is installed></td><td>Used to rotate the SPF motor forward for 10 sec.</td><td></td><td></td></tr>
<tr><td></td><td>4</td><td>SPF motor reverse rotation operation check
<Only when an option is installed></td><td>Used to rotate the SPF motor reversely for 10 sec.</td><td></td><td></td></tr>
<tr><td></td><td>8</td><td>SPF paper feed solenoid operation check
<Only when an option is installed></td><td>Used to drive the SPF paper feed solenoid (PSOL) at the cycle of 500 msec ON and 500 msec OFF 20 times.</td><td></td><td></td></tr>
<tr><td></td><td>9</td><td>RSPF reverse solenoid operation check
<Only when an option is installed></td><td>Used to drive the RSPF reverse solenoid (RSOL) at the cycle of 500 msec ON and 500 msec OFF 20 times.</td><td></td><td></td></tr>
<tr><td></td><td>10</td><td>RSPF paper exit gate solenoid operation check
<Only when an option is installed></td><td>Used to drive the RSPF paper exit gate solenoid (GSOL) at the cycle of 500 msec ON and 500 msec OFF 20 times.</td><td></td><td></td></tr>
<tr><td></td><td>11</td><td>SPF PS release solenoid operation check
<Only when an option is installed></td><td>Used to drive the SPF PS release solenoid at the cycle of 500 msec ON and 500 msec OFF 20 times.</td><td></td><td></td></tr>
</table>

Main code	Sub code	Contents	Details of operation	Initial value	Set range
3	2	Shifter job separator sensor operation check	Used to check the sensors state in the shifter job separator with the LED on the operation panel. Display <Lighting at sensor ON> Shifter HP sensor: Machine position JAM LED Job separator HP sensor: SPF JAM LED Paper exit full sensor: Second cassette position JAM LED		
	3	Shifter operation check	Used to drive the shifter motor at the speed of printing of A4 (8-1/2 × 11"). Pressing the clear all key or interrupt key moves the shifter to the home position. Key operation The shifter is moved to the home position: Clear all key, interrupt key		
	4	Job separator operation check **<Only when an option is installed>**	Used to drive the job separator one way. Pressing the clear all key or interrupt key stops the job separator at the home position. Key operation Stops at the home position: Clear all key, interrupt key		
	11	Shifter Home Position check	Used to drive the shifter motor Key operation Feed: Exposure up key or "3" key Return: Exposure down key or "4" key Move to Home Position: Magnification ratio display key or "5" key		
5	1	Operation panel display check	Used to light all LED's on the operation panel for 5 sec.		
	2	Heater lamp lighting check, cooling fan motor operation check	Used to turn ON the heater lamp for 500 msec and OFF for 500 msec 5 times. At the same time, the cooling fan is rotated at a high speed. After checking the heater lamp operation, the cooling fan motor rotate at a low speed.		
	3	Copy lamp lighting check	Used to light the copy lamp for 10 sec.		
6	1	Paper feed solenoid operation check	When the start key is pressed, the selected paper feed solenoid is driven at the cycle of 500 msec ON and 500 msec OFF 20 times. Key operation: Solenoid selection: Tray select button Display: <Lighting at solenoid selection> Main cassette paper feed solenoid: Main cassette select LED Multi manual paper feed solenoid: Manual paper feed select LED No. 2 cassette paper feed solenoid: No. 2 cassette select LED No. 3 cassette paper feed solenoid: No. 3 cassette select LED **<Only when an option is installed>** No. 4 cassette paper feed solenoid: No. 4 cassette select LED **<Only when an option is installed>** Resist roller solenoid: Machine position JAM LED No. 2 cassette transport solenoid: No. 2 cassette position JAM LED No. 3 cassette transport solenoid: Machine position JAM LED + No. 2 cassette position JAM LED **<Only when an option is installed>** No. 4 cassette transport solenoid: JAM LED **<Only when an option is installed>**		
	10	Main cassette semi-circular roller drive	Used to rotate the semi-circular roller of the main cassette one turn to face it downward.		

Main code	Sub code	Contents	Details of operation	Initial value	Set range
7	1	Aging with warmup time display	Execute the simulation input with the copier side cover open, then close the side cover, and the machine will start warming up. Warm up time is counted up every second and it is displayed. After completion of warmup, count up is terminated. When the clear all key is pressed ready lamp is lighted and the copy quantity is entered and the start key is pressed, copying is made to make the set quantity of copies. At that time, the paper size does not matter. Key operation Copy quantity setting: Copy quantity keys		1 ~ 99
	4	Warmup saving	Used to bring the machine to the ready state without warmup.		1 ~ 99
	6	Intermittent aging	After completion of warmup, counting is stopped and the ready lamp is lighted. When the copy quantity is entered and the start key is pressed, copying is made to make the set quantity of copies. After 3 sec standby, copying is made again to make the set quantity of copies. After that this operation is repeated. The paper size does not matter. Key operation Copy quantity setting: Copy quantity keys		1 ~ 99
	8	Warmup time display	Execute the simulation input with the copier side cover open, then close the side cover, and the machine will starts warming up. Warm up time is counted up every second and it is displayed.		1 ~ 99
9	1	Duplex motor forward rotation operation check **<Only AR-205>**	Used to rotate the duplex motor forward for 30 sec.		
	2	Duplex motor reverse rotation operation check **<Only AR-205>**	Used to rotate the duplex motor reversely for 30 sec.		
	4	Duplex motor rotation speed adjustment **<Only AR-205>**	The currently set duplex motor rotation speed set value is displayed. When the set value is entered and the start key is pressed, the set value is stored. Key operation Duplex motor rotation speed set value: Copy quantity keys	6	1 ~ 13
	5	Duplex motor switchback time adjustment **<Only AR-205>**	The currently set duplex motor switchback time set value is displayed. When the set value is entered and the start key is pressed, the set value is stored. Key operation Duplex motor switchback time set value: Copy quantity keys	50	18 ~ 76
10		Toner motor operation check	Used to operate the toner motor for 30 sec. Note: If this simulation is executed with the toner hopper installed, toner is automatically supplied to the developer. Be careful of overtoner.		
14		Trouble (except for U2) cancel	Used to cancel troubles except for U2.		
16		U2 trouble cancel	Used to cancel U2 trouble.		
20	1	Maintenance counter clear	Used to clear the maintenance counter. *2		

*2: Display after clearing each counter
000 (0.75 sec) → Blank (0.35 sec) → 000 (0.75 sec) → Blank (1.0 sec) → Repetition

Main code	Sub code	Contents	Details of operation	Initial value	Set range
21	1	Maintenance cycle setting	Used to display the currently set maintenance cycle at the numbers shown at right. When the set value is entered and the start key is pressed, the set value is stored. Key operation/Display 0: 2500 sheets / 3: 30000 sheets 1: 5000 sheets / 4: 150000 sheets 2: 15000 sheets / 5: FREE (999999 sheets) 6: 10000 sheets	4	0 ~ 6
	2	Mini maintenance cycle setting **<Japan only>**	Used to display the currently set mini maintenance cycle at the numbers shown at right. When the set value is entered and the start key is pressed, the set value is stored. Key operation/Display 0: 2500 sheets 1: 5000 sheets 2: 10000 sheets 3: FREE (999999 sheets)		
22	1	Maintenance counter display	Used to display the current maintenance counter value. ∗1		
	2	Maintenance preset value display	Used to display the current maintenance preset value (set with SIM 21-1). ∗1		
	3	JAM memory display	Used to display a JAM generated during copying on the JAM position display on the operation panel. Max. 30 recent jams are stored. JAM No. 1 is displayed even when there is no JAM. Key operation: JAM history select: Magnification ratio display key Display: The history number (1 ~ 30) is displayed on the display. The JAM position LED corresponding to the history number is lighted.		
	4	Total JAM counter display	Used to display the current total JAM counter value. ∗1		
	5	Total counter display	Used to display the current total counter value. ∗1		
	6	Developing counter display	Used to display the current developing unit counter value. ∗1		
	7	Developing preset counter value display **<Japan only>**	Used to display the current mini maintenance preset value (set with SIM 21-2). ∗1		
	8	SPF counter display **<Only when an option is installed>**	Used to display the current SPF counter value. ∗1		
	9	Paper feed counter display	Used to display the current paper feed counter value for each paper feed port. ∗1 Key operation Paper feed port selection: Tray select key		
	12	Drum counter display	Used to display the current drum counter value. ∗1		
	14	Copier ROM version display	Used to display the version number of the main ROM. Display (Example) When the ROM version is 4.01: 004 → Blank → 001 → Blank → Repetition		

∗1: Each counter display method
To display 123456: 123 (0.75 sec) → Blank (0.35 sec) → 456 (0.75 sec) → Blank (1.0 sec) → repetition
∗2: Display after clearing each counter
000 (0.75 sec) → Blank (0.35 sec) → 000 (0.75 sec) → Blank (1.0 sec) → Repetition

Main code	Sub code	Contents	Details of operation	Initial value	Set range
22	15	Trouble memory display	Used to display the actually occurred trouble codes on the display on the operation panel. When the start key is pressed during the main code display, the sub code is displayed. Max. 20 recent trouble codes are stored. Key operation: Sub code display: Start key Trouble code history select: Magnification ratio display key Display: Histories 1 ~ 10: The upper digit of display "A" ~ "J" lights up. Histories 11 ~ 20: The upper digit of display "A" ~ "J" blinks. ● Display without trouble code Main code: "– –" Sub code: "00"		
	16	Duplex print counter display **<Only AR-205>**	Used to display the current duplex print counter value. ∗1		
	17	Copy counter display	Used to display the current copy counter value. ∗1		
	18	Printer counter display **<Only when an option is installed>**	Used to display the current printer counter value. ∗1		
	19	Electronic sort counter display **<Only when an option is installed>**	Used to display the current electronic sort counter value. ∗1		
	20	FAX print counter display **<Only when an option is installed>**	Used to display the current FAX print counter value. ∗1		
	21	Scanner counter display	Used to display the current scanner counter value.		
24	1	JAM memory, JAM counter clear	Used to clear the JAM memory and the JAM counter. ∗2		
	2	Trouble memory clear	Used to clear the trouble memory. ∗2		
	4	SPF counter clear **<Only when an option is installed>**	Used to clear the SPF counter. ∗2		
	5	Duplex counter clear **<Only AR-205>**	Used to clear the duplex counter. ∗2		
	6	Paper feed counter clear	Used to clear the paper feed counter. ∗2		
	7	Drum counter clear	Used to clear the drum counter. ∗2		
	8	Copy counter clear	Used to clear the copy counter. ∗2		
	9	Printer counter clear **<Only when an option is installed>**	Used to clear the printer counter. ∗2		
	10	Electronic sort counter clear **<Only when an option is installed>**	Used to clear the electronic sort counter. ∗2		
	11	FAX print counter clear **<Only when an option is installed>**	Used to clear the FAX print counter. ∗2		
	13	Scanner counter clear	Used to clear the scanner counter. ∗2		
25	1	Main motor operation check	Execute the simulation with the developer cartridge removed, and the main motor will rotate for 30 sec. At that time, the cooling motor rotates at a low speed.		
	10	Polygon motor operation check	Used to drive the polygon motor for 30 sec.		

∗2: Display after clearing each counter
000 (0.75 sec) → Blank (0.35 sec) → 000 (0.75 sec) → Blank (1.0 sec) → Repetition

<table>
<tr><th>Main code</th><th>Sub code</th><th>Contents</th><th>Details of operation</th><th>Initial value</th><th>Set range</th></tr>
<tr><td rowspan="4">26</td><td>1</td><td>Option switch display</td><td>Used to display the installed option on the operation panel. (The LED corresponding to the installed option is lighted.)
<table>
<tr><th>Key operation</th><th>Display</th></tr>
<tr><td>Display select:
Magnification ratio display key</td><td><Lighting with an option installed>
When “A” is displayed:
Shifter: Paper empty LED
Job separator: JAM LED
SPF: SPF select LED
RSPF: SPF JAM LED
Duplex mode: Main cassette select LED
Simplex mode: Multi manual paper feed select LED
When “b” is displayed:
Cassette (2nd step): No. 2 cassette select LED
Cassette (3rd step): No. 3 cassette select LED
Cassette (4th step): No. 4 cassette select LED
Memory installed: Paper empty LED
FAX: JAM LED
Printer: Main body JAM LED
ERDH: Main cassette select LED
16CPM: SPF JAM LED
20CPM: SPF select LED
Document sensor: Auto paper select LED</td></tr>
</table></td><td></td><td></td></tr>
<tr><td>3</td><td>Auditor setting</td><td>Used to display the current auditor setting with the numbers at right. After entering the set value, press the start key, and the set value is stored.
<table>
<tr><th>Key operation/Display</th></tr>
<tr><td>0: Built-in auditor
1: Coin vendor
2: Others</td></tr>
</table></td><td>0</td><td>0 ~ 2</td></tr>
<tr><td>5</td><td>Counter mode setting</td><td>Used to set the print counter mode in A3 or 11" × 17".
Used to display the currently set counter value with the numbers at right. After entering the set value, press the start key, and the set value is stored.
<table>
<tr><th colspan="2">Key operation/Display</th></tr>
<tr><td>0: Total/Developer = 2 counts</td><td>Maintenance = 2 counts</td></tr>
<tr><td>1: Total/Developer = 1 count</td><td>Maintenance = 2 counts</td></tr>
<tr><td>2: Total/Developer = 2 counts</td><td>Maintenance = 1 count</td></tr>
<tr><td>3: Total/Developer = 1 count</td><td>Maintenance = 1 count</td></tr>
</table></td><td>0</td><td>0 ~ 3</td></tr>
<tr><td>6</td><td>Destination setting</td><td>Used to display the current destination setting with the numbers at right. After entering the set value, press the start key, and the set value is stored.
<table>
<tr><th colspan="2">Key operation/Display</th></tr>
<tr><td>0: Japan</td><td>6: France (AB series)</td></tr>
<tr><td>1: USA (Inch series)</td><td>7: EX inch series</td></tr>
<tr><td>2: Canada (Inch series)</td><td>8: EX AB series</td></tr>
<tr><td>3: Germany (AB series)</td><td>9: EX inch series (FC conformity)</td></tr>
<tr><td>4: UK (AB series)</td><td>10: EX AB series (FC conformity)</td></tr>
<tr><td>5: Australia (AB series)</td><td>11: Taiwan, China (AB series)</td></tr>
</table></td><td>0</td><td>0 ~ 11</td></tr>
</table>

Main code	Sub code	Contents	Details of operation	Initial value	Set range
26	10	Model name setting	Used to set the model name of the machine used with the following numbers. After entering the set value, press the start key and the set value is stored. Key operation/Display 0: AL-1600 / 11: AR-N200 1: AL-1610 / 12: AR-N205 2: AL-1620 / 13: AL-1621 3: AL-1640/AL-1641 / 14: AL-1650 4: AR-160/AR-S160 / 15: AL-1670 5: AR-161/AR-S161 / 16: AR-F200 6: AR-200S / 17: DM-2000 7: AR-200/AR-S200 / 18: DM-2005 8: AR-205/AR-S205 / 19: DM-2010 9: AR-F160 10: AR-F205	0	0 ~ 19
	22	Language setting	Used to display the current setting of the language information with the number at right. After entering the set value, press the start key, and the set value is stored. Key operation/Display 0: Japanese / 4: Italian 1: English / 5: Dutch 2: French / 6: Swedish 3: German / 7: Spanish	0	0 ~ 7
	30	CE mark conformity control setting	Used to display the current setting of CE mark conformity control with the number at right. After entering the set value, press the start key, and the set value is stored. Key operation/Display 0: CE mark control OFF 1: CE mark control ON	0	0 ~ 1
	32	Fan rotation duty change state setup	The currently set fan motor rotation duty is displayed with the following numbers. After entering the set value, press the start key to store the set value. Key operation/Display 0: Operating 50%, standby 30% 1: Operating 80%, standby 50%	0	0.1
	38	Cancel of stop at drum life over **<Not Used>**	The currently set value is displayed. After entering the set value, press the start key to store the set value. Key operation/Display 0: The machine stops at drum life over. 1: The machine does not stop at drum life over.	0	0 ~ 1
	42	Transfer timing adjustment	After completion of warm up, shading is performed and the currently set transfer timing adjustment value is displayed. Key operation Transfer timing adjustment value: Copy quantity keys “1”: 240 ms “3”: 260 ms “5”: 280 ms “7”: 300 ms “9”: 320 ms	5	1, 3, 5, 7, 9
	50	Black-white reversion function setup	The current setup of black-white reversion is displayed with the following numbers. After entering the set value, press the start key to store the set value. Key operation/Display 0: Black-white reversion function enabled 1: Black-white reversion function disabled	0	0.1

Main code	Sub code	Contents	Details of operation	Initial value	Set range
26	51	Sort/Group copy temporary stop function setup **<Only when an option is installed>**	Used to set whether temporary stop for every 250-sheet print (150-sheet print when the job separator is installed) is made or not during copying with the sort/group function. The current setup is displayed with the following numbers. After entering the set value, press the start key to store the set value. Key operation/Display 0: Does not stop. 1: Stops.	1	0.1
30	1	Machine sensor operation check	Used to check the sensors in the machine transport system with LED on the operation panel. Display <Lighting at sensor ON> Paper entry sensor: Machine position JAM LED Duplex sensor: SPF JAM LED **<Only AR-205>** Paper exit sensor: JAM LED No. 2 cassette transport sensor: No. 2 cassette position LED No. 3 cassette transport sensor: No. 3 cassette position LED **<Only when an option is installed>** No. 4 cassette transport sensor: No. 4 cassette position LED **<Only when an option is installed>** Drum initial SW: DRUM LED		
41	2	OC document sensor adjustment **<Other than AR-160>**	Used to read the document sensor input value with paper and perform the sensor detection level adjustment. For the adjustment procedure of the document sensor input value, refer to the previous descriptions.		
	3	Document sensor light reception level display **<Other than AR-160>**	Used to display the light reception level and the detection level of the document sensor. (The sensor level adjusted with SIM 41-2 is displayed.) Key operation: Light reception/Detection level select: Magnification ratio display key; Sensor select: Auto magnification ratio select key Display: Display at the 3rd digit; "A": Light reception level display; "b": Document detection level display; Sensor A: A3 (11 × 17) document size LED; Sensor B: A4 (8 1/2 × 14) document size LED; Sensor C: A4R (8 1/2 × 11) document size LED; Sensor D: B4 (8 1/2 × 5 1/2) document size LED		
42	1	Developing counter clear	Used to clear the Developing counter. *2		
43	1	Fusing temperature setting	Used to display the current setting of the fusing temperature at right. After selecting the fusing temperature with the magnification ratio display key, press the start key, and the set value is stored. The set range is 155 ~ 190˚C. Use the magnification ratio key to adjust the value by –5˚C. Key operation Fusing temperature select: Magnification ratio display key	180	155 ~ 190
46	1	Copy density level adjustment	After completion of warmup, shading is performed and the currently set copy density level is displayed. For the adjustment procedure, refer to the previous descriptions. Key operation: Mode select: Exposure mode select key; Copy density level: Copy quantity keys Display: <LED lighting at each mode selection>; Auto mode: AUTO LED; Manual mode: MANUAL LED; Photo mode: PHOTO LED; Toner save mode: MANUAL + PHOTO LED; AETS mode: AUTO + PHOTO LED	48	1 ~ 99

*2: Display after clearing each counter
000 (0.75 sec) → Blank (0.35 sec) → 000 (0.75 sec) → Blank (1.0 sec) → Repetition

<table>
<tr><th>Main code</th><th>Sub code</th><th>Contents</th><th>Details of operation</th><th>Initial value</th><th>Set range</th></tr>
<tr><td rowspan="4">48</td><td>1</td><td>Main scanning (front/rear) direction magnification ratio adjustment (Copy/FAX/OC-SPF common)</td><td>After completion of warmup, shading is performed and the currently set main scanning (front/rear) direction magnification ratio adjustment and the OC mode document center off adjustment are performed. For the adjustment procedure, refer to the previous descriptions.
<table>
<tr><th>Key operation</th><th>Display</th></tr>
<tr><td>Adjustment mode select: Magnification ratio display key</td><td>Auto magnification ratio adjustment: AUTO LED</td></tr>
<tr><td>Manual main scanning direction magnification ratio adjustment
Set value: Copy quantity keys</td><td>Manual magnification ratio adjustment: MANUAL LED
OC mode document center off adjustment: PHOTO LED</td></tr>
</table></td><td>58</td><td>1 ~ 99</td></tr>
<tr><td>2</td><td>OC mode sub scanning direction magnification ratio adjustment in copying</td><td>After completion of warmup, shading is performed and the currently set OC mode sub scanning direction magnification ratio adjustment in copying is performed. For the adjustment procedure, refer to the previous descriptions.
<table>
<tr><th>Key operation</th></tr>
<tr><td>OC mode sub scanning direction magnification ratio in copying: Copy quantity keys</td></tr>
</table></td><td>50</td><td>1 ~ 99</td></tr>
<tr><td>5</td><td>SPF mode sub scanning direction magnification ratio adjustment in copying

<Only when an option is installed></td><td>After completion of warmup, shading is performed and the currently set SPF mode sub scanning direction magnification ratio adjustment in copying is performed. For the adjustment procedure, refer to the previous descriptions.
<table>
<tr><th>Key operation</th><th>Display</th></tr>
<tr><td>Adjustment mode select: Exposure mode select key</td><td>Auto: SPF mode sub scanning direction magnification ratio in copying</td></tr>
<tr><td>Set value: Copy quantity keys</td><td>Manual: RSPF mode sub scanning direction magnification ratio in copying</td></tr>
</table></td><td>33
45</td><td>1 ~ 99</td></tr>
<tr><td>6</td><td>OC mode sub scanning direction magnification ratio adjustment in FAX

<Only when an option is installed></td><td>After completion of warmup, shading is performed and the currently set OC mode sub scanning direction magnification ratio adjustment in FAX is performed. For the adjustment procedure, refer to the previous descriptions.
<table>
<tr><th>Key operation</th></tr>
<tr><td>OC mode sub scanning direction magnification ratio in FAX: Copy quantity keys</td></tr>
</table></td><td>50</td><td>1 ~ 99</td></tr>
<tr><td>7</td><td>SPF mode sub scanning direction magnification ratio adjustment in FAX

<Only when an option is installed></td><td>After completion of warmup, shading is performed and the currently set SPF mode sub scanning direction magnification ratio in FAX is performed. For the adjustment procedure, refer to the previous descriptions.
<table>
<tr><th>Key operation</th></tr>
<tr><td>SPF mode sub scanning direction magnification ratio in FAX: Copy quantity keys</td></tr>
</table></td><td>50</td><td>1 ~ 99</td></tr>
</table>

<table>
<tr><th>Main code</th><th>Sub code</th><th>Contents</th><th>Details of operation</th><th>Initial value</th><th>Set range</th></tr>
<tr><td rowspan="4">50</td><td>1</td><td>Copy image position adjustment</td><td>After completion of warmup, shading is performed and the currently set value is displayed. For the adjustment procedure, refer to the previous descriptions.
<table>
<tr><th>Key operation</th><th>Display</th></tr>
<tr><td>Adjustment mode select:
Exposure mode select key
Set value:
Copy quantity keys</td><td>Auto: Copy lead edge adjustment
Manual: SPF lead edge adjustment
<Not used>
Photo: Main cassette lead edge void adjustment
Auto + Manual: Left edge void adjustment
Auto + Photo: Rear edge void adjustment
Auto + Manual + Photo: Option cassette lead edge void adjustment
Manual + Photo: Multi bypass tray lead edge void adjustment
None: Duplex lead edge void adjustment <Only AR-205>
Exposure 1: Print start position adjustment
Exposure 3: Duplex lead edge adjustment <Only AR-205>
Exposure 5: Duplex rear edge void adjustment <Only AR-205></td></tr>
</table></td><td>55
77
18
48
40
18
18
20
55
60
60</td><td>1 ~ 99</td></tr>
<tr><td>10</td><td>Paper off center adjustment</td><td>After completion of warmup, shading is performed and the currently set off center adjustment of each paper feed port is displayed. For the adjustment procedure, refer to the previous descriptions.
<table>
<tr><th>Key operation</th><th>Display</th></tr>
<tr><td>Paper feed port tray select: Tray select key
Off center adjustment value: numeric keys</td><td>Main cassette:
Main cassette select LED
Manual paper feed:
Manual feed select LED
No. 2 cassette:
No. 2 cassette select LED
No. 3 cassette:
No. 3 cassette select LED
<Only when an option is installed>
No. 4 cassette:
No. 4 cassette select LED
<Only when an option is installed>
Duplex: None <Only AR-205></td></tr>
</table></td><td>50</td><td>1 ~ 99</td></tr>
<tr><td>13</td><td>OC mode document off center adjustment</td><td>After completion of warmup, shading is performed and the currently set off center adjustment value for the document in OC reading is displayed. For the adjustment procedure, refer to the previous descriptions.
<table>
<tr><th>Key operation</th></tr>
<tr><td>Off center adjustment value: Copy quantity keys</td></tr>
</table></td><td>50</td><td>1 ~ 99</td></tr>
<tr><td>16</td><td>SPF mode document off center adjustment

<Only when an option is installed></td><td>After completion of warmup, shading is performed and the currently set off center adjustment value for the document in SPF reading is displayed. For the adjustment procedure, refer to the previous descriptions.
<table>
<tr><th>Key operation</th></tr>
<tr><td>Off center adjustment value: Copy quantity keys</td></tr>
</table></td><td>61</td><td>1 ~ 99</td></tr>
<tr><td>18</td><td>Duplex memory reverse position adjustment

<Only when an option is installed></td><td>After completion of warmup, shading is performed and currently set value is displayed
<table>
<tr><th>Key operation</th></tr>
<tr><td>Memory reverse position adjustment value:
Copy quantity keys</td></tr>
</table></td><td>58</td><td>1 ~ 99</td></tr>
</table>

<table>
<tr><th>Main code</th><th>Sub code</th><th>Contents</th><th>Details of operation</th><th>Initial value</th><th>Set range</th></tr>
<tr><td>50</td><td>19</td><td>Duplex rear edge void adjustment

<Only when an option is installed></td><td>After completion of warmup, shading is performed and currently set value is displayed.
<table>
<tr><th>Key operation</th><th>Display</th></tr>
<tr><td>Adjustment mode select:
Exposure mode select key</td><td>Auto: SPF/R-SPF rear edge void</td></tr>
<tr><td>Set value:
Copy quantity keys</td><td>Manual: R-SPF off center
Photo: R-SPF lead edge void</td></tr>
</table></td><td>37

52
70</td><td>1 ~ 99</td></tr>
<tr><td>51</td><td>2</td><td>Resist amount adjustment</td><td>After completion of warmup, shading is performed and the currently set resist amount adjustment value is displayed.
<table>
<tr><th>Key operation</th><th>Display</th></tr>
<tr><td>Resist amount adjustment:
Copy quantity keys
Adjustment mode select:
Exposure mode select key</td><td>Auto: Main cassette
Manual: Second cassette
Photo: Manual feed tray
Auto + Manual: Duplex <Only AR-205>
Auto + Photo: RSPF <Only when an option is installed></td></tr>
</table></td><td>50
1
50
50
48</td><td>1 ~ 99
(6 ~ 94 for the duplex only)</td></tr>
<tr><td>63</td><td>1</td><td>Shading data check</td><td>The copy lamp is shifted to the shading position and it is lighted with the reference voltage at AD conversion fixed (Vref– = 0.5V, Vref+ = 4.5V). The level of one pixel at the center at that time is displayed.
<table>
<tr><th>Display</th></tr>
<tr><td>Display section: Shading data</td></tr>
</table></td><td></td><td></td></tr>
<tr><td>64</td><td>1</td><td>Self print mode</td><td>Disregards the optical system and performs self printing in 1 by 2mode.</td><td></td><td></td></tr>
<tr><td>67</td><td>14</td><td>Printer Flash ROM Data Download
<Only when an option is installed></td><td>The machine enters the version up mode of the printer PWB flash ROM. For details, refer to the AR-PB8 Service Manual.</td><td></td><td></td></tr>
</table>

[8] USER PROGRAMS

The user programs allow the parameters of certain functions to be set, changed, or canceled as desired.

1. List of user programs

This copier has the following user programs.

Program No.	Program name	Description
1	Auto clear time	Sets the auto clear time. The copier returns to the initial settings when the auto clear time elapses after the last copy is made.
2	Preheat mode	Sets the time that elapses before the copier enters the preheat mode after any operation is made.
3	Auto power shut-off timer	Sets the time that elapses before the copier enters the auto power shut-off mode after any operation is made.
4	Stream feeding mode*	Enables or disables the stream feeding mode when an optional SPF or RSPF is installed.
5	Auto power shut-off setting	Enables or disables the auto power shut-off mode.
6	Border line for 2 in 1 or 4 in 1*	Enables or disables the border line which is printed in 2 in 1 or 4 in 1 copying when an optional electronic sorting kit and an optional SPF or RSPF are installed.
7	Rotation copy*	Enables or disables rotation of original images.
8	Auto paper select mode	Enables or disables the auto paper selection.
9	Auto tray switching	Enables or disables the automatic tray switching which occurs when paper in a tray runs out. (This switching cannot switch to the bypass tray.)
10	Auditing mode	Enables or disables the auditing mode, which controls access to copier.
11	Account number entry	Registers accounts for auditing mode.
12	Account number change	Changes account numbers for auditing mode.
13	Account number deletion	Deletes accounts for auditing mode.
14	Number of copies per account	Displays the total number of copies made against account numbers.
15	Resetting account	Resets all audit accounts or resets any desired individual account.
16	Erase width adjustment*	Sets the amount of the edge erase and center erase areas.
17	Layout in 2 in 1 copy*	Selects a pattern for 2 in 1 copying.
18	Layout in 4 in 1 copy*	Selects a pattern for 4 in 1 copying.
19	Offset of paper output tray	Enables or disables the offset function of the paper output tray. The offset function can be specified respectively for the upper and lower areas separated by an optional job separator tray kit.
20	Image rotation in duplex copying	Enables or disables image rotation (180˚) of the front side in one-sided to two-sided copying or two-sided to one-sided copying.
22	Location of the margin*	Selects the location of the expanded margin.

* These programs do not affect the copier functions unless certain optional equipment is installed.

2. Setting the user programs

1) Press and hold the light (◎) key for more than 5 seconds until all the alarm indicators (, , , , and) blink and "- -" appears in the copy quantity display.
2) Enter a program number using the numeric keys.
   - The selected program number will blink in the copy quantity display.
   - If a mistake is made in steps 2) to 4), press the CLEAR (©) key. The copier will return to step 2).
   - The program numbers are shown in the table below.

For example, to change the setting of the auto power shut-off timer, press key 3.

Program name	Program No.
Auto clear time	1
Preheat mode	2
Auto power shut-off timer	3
Stream feeding mode	4
Auto power shut-off setting	5
Border line for 2 in 1 or 4 in 1	6
Rotation copy	7
Auto paper select mode	8
Auto tray switching	9
Auditing mode	10
Account number entry	11
Account number change	12
Account number deletion	13
Number of copies per account	14
Resetting account	15
Erase width adjustment	16
Layout in 2 in 1 copy	17
Layout in 4 in 1 copy	18
Offset of paper output tray	19
Image rotation in duplex copying	20
Location of the margin	22

3) Press the START key.
   - For programs 1 to 9 and 16 to 19, the entered program number will be steadily lit on the left side of the copy quantity display and the currently selected parameter number for the program will blink on the right side.
   - For programs 10 to 15 (programs for auditing accounts), the display varies with the program number.
4) Select the desired parameter using the numeric keys.
   - The entered parameter number will blink on the right side of the copy quantity display.
   - The parameters are shown in the table below.

For example, to change the setting of the auto power shut-off timer to 60 min., press key 2.

Program name	Parameters	
Auto clear time	0	OFF
	1	30sec
	∗2	60sec
	3	90sec
	4	120sec
	5	10sec
Preheat mode∗∗	0	OFF
	∗∗1	30sec
	2	60sec
	∗ 3	90sec
	4	120sec
Auto power shut-off timer	∗ 1	30min
	2	60min
	3	90min
	4	120min
	5	240min
Stream feeding mode	∗ 0	OFF
	1	ON
Auto power shut-off setting	0	OFF
	∗ 1	ON
Border line for 2 in 1 or 4 in 1	∗ 0	OFF
	1	ON
Rotation copy	0	OFF
	∗ 1	ON
Auto paper select mode	0	OFF
	∗ 1	ON
Auto tray switching	0	OFF
	∗ 1	ON
Erase width adjustment	0	0mm (0")
	1	5mm (1/4")
	∗ 2	10mm (1/2")
	3	15mm (3/4")
	4	20mm (1")
Layout in 2 in 1 copy	∗ 1	Pattern 1
	2	Pattern 2
Layout in 4 in 1 copy	∗ 1	Pattern 1
	2	Pattern 2
	3	Pattern 3
	4	Pattern 4
Offset of paper output tray	0	Upper OFF, lower OFF
	∗ 1	Upper ON, lower ON
	2	Upper ON, lower OFF
	3	Upper OFF, lower ON
Image rotation in duplex copying	∗0	OFF
	1	ON
Location of the margin	∗1	Left
	2	Top

Factory default settings are indicated with an asterisk (∗).

∗∗ In European countries, the default setting of the preheat mode is 1 (30 sec.). For other programs, factory-default settings in these countries are same to those shown above with an asterisk (∗).

Note: If you select "0" (OFF) in a program, the corresponding function will be disabled.

5) Press the START key.
   - The right-hand number in the copy quantity display will be steadily lit and the entered value will be stored.
6) To continue with other user programs, press the © key and then repeat steps 2 to 5. To exit the user program mode, press the light (◐) key.
   - All the alarm indicators will go out.

Settings for auditing accounts

A. Program No. 10: Auditing mode

If the auditing mode is enabled, copying is limited to operators with an assigned 3-digit account number. A maximum of 20, 3-digit account numbers can be assigned. Use program No. 11 to register account numbers.

When program No. 10 is entered, the current setting (0: OFF, 1:ON) will blink on the right side of the copy quantity display.

1) Select the desired setting using the numeric keys.
   0: OFF
   1: ON
2) Press the START key.
   - The setting will be stored.
3) To continue with other user programs, press the © key and enter another program number. To exit the user program mode, press the light (◐) key.

B. Program No. 11: Account number entry

Program No. 11 is used to register accounts. When program No. 11 is entered,

1) Enter a 3-digit account number using the numeric keys.
   - Any 3-digit number except "000" can be registered as an account number.
2) Press the START key.
   - If a number that is already registered or "000" is entered, the number will blink in the copy quantity display.
3) Repeat steps 1 and 2 for other account numbers.
4) To continue with other user programs, press the © key and enter another program number. To exit the user program mode, press the light (◐) key.

C. Program No. 12: Account number change

Program No. 12 is used to change account numbers. When program No. 12 is entered, an account number will appear in the copy quantity display.

- If no account number has been registered, "12E" will appear in the copy quantity display. Press the © key. The system will return to step 2 on page 39.

1) Use the copy ratio display (%) key to select the account number to be changed.
   - Use the (%) key to advance through the account numbers.
2) Press the START key.
   - The account number will be erased and "- - -" will blink in the copy quantity display.
3) Enter a new account number using the numeric keys.
4) Press the START key.
   - If a number that is already registered or "000" is entered, the number will blink in the copy quantity display.
5) Repeat steps 1 to 4 for other account numbers.
6) To continue with other user programs, press the © key and enter another program number. To exit the user program mode, press the light (◐) key.

D. Program No. 13: Account number deletion

- If no account number has been registered, "13E" will appear in the copy quantity display. Press the © key. The system will return to step 2 on page 39.

1) To delete an individual account, press the 0 key.
   To delete all accounts, press key 1.
2) Press the START key.

- If you have pressed the 0 key in step 1, an account number will appear in the copy quantity display. Proceed to step 3).
- If you have pressed key 1, all account numbers will be deleted. Proceed to step 5).

3) Use the copy ratio display (%) key to select the account number to be deleted.
   - Use the % key to advance through the account numbers.
4) Press the START key.
   - The specified account will be deleted.
5) To continue with other user programs, enter another program number. To exit the user program mode, press the light (◐) key.

E. Program No. 14: Number of copies per account

- If no account number has been registered, "14E" will appear in the copy quantity display. Press the © key. The system will return to step 2 on page 39.

1) Use the copy ratio display (%) key to select the account number.

l Use the % key to advance through the account numbers.

2) Press and hold down the 0 key.
   - The number of copies made against the specified account number will be displayed. The two higher digits and the three lower digits will appear alternately while the 0 key is pressed.

   Example: 1,234 copies
   - The upper limit for the number of copies is 49,999. If the number of copies made reaches 50,000, the number will be reset to 0 and counting will start again from 0.
3) Repeat steps 1 and 2 for other account numbers.
4) To continue with other user programs, press the © key and select another program number. To exit the user program mode, press the light (%) key.

F. Program No. 15: Resetting account

- If no account number has been registered, "15E" will appear in the copy quantity display. Press the © key. The DM Sytem will return to step 2 on page 39.

1) To reset an individual account, press the 0 key.
   To reset all accounts, press key 1.
2) Press the START key.
   - If you have pressed the 0 key in step 1, an account number will appear in the copy quantity display. Proceed to step 3.
   - If you have pressed key 1, the number of copies against all account numbers will be reset. Proceed to step 5.
3) Use the copy ratio display (%) key to select the accountnumber to be reset.
   - Use the % key to advance through the account numbers.
4) Press the START key.
   - The number of copies against the specified account number will be reset.
5) To continue with other user programs, enter another program number. To exit the user program mode, press the light (%) key.

[9] TROUBLE CODE LIST

1. Trouble code list

Trouble code		Trouble content
E1	00	E-Sort board communication trouble
	10	E-Sort board trouble
	11	E-Sort ASIC error
	12	E-Sort CODEC error
	13	E-Sort flash ROM error
	14	E-Sort RAM error
	15	E-Sort page memory error
	16	E-Sort SIMM error
	17	Rotation RAM error
	80	E-Sort board communication trouble (Protocol)
	81	E-Sort board communication trouble (Parity)
	82	E-Sort board communication trouble (Overrun)
	84	E-Sort board communication trouble (Framing)
	88	E-Sort board communication trouble (Time-out)
E7	03	LSU trouble
	04	CCD white level trouble
	05	CCD black level trouble
F5	02	Copy lamp error
F6	00	FAX board communication trouble
	10	FAX board trouble
	80	FAX board communication trouble (Protocol)
	81	FAX board communication trouble (Parity)
	82	FAX board communication trouble (Overrun)
	84	FAX board communication trouble (Framing)
	88	FAX board communication trouble (Time-out)
F9	00	Printer PWB communication trouble
	10	Printer PWB trouble
	80	Printer PWB communication trouble (Protocol)
	81	Printer PWB communication trouble (Parity)
	82	Printer PWB communication trouble (Overrun)
	84	Printer PWB communication trouble (Framing)
	88	Printer PWB communication trouble (Time-out)
H2	00	Thermistor open detection
H3	00	Heat roller abnormally high temperature
H4	00	Heat roller abnormally low temperature
L1	00	Mirror base feed trouble
L3	00	Mirror base return trouble
L4	01	Main motor lock
	10	Job separator motor abnormality
L6	10	Polygon motor lock
L8	01	Zero cross pulse (FW) trouble
U2	04	EEPROM serial communication error
	11	Counter check sum error
	12	Adjustment value check sum error (EEPROM)
U3	29	Mirror base home position error
U9	00	Operation control PWB communication trouble
	80	Operation control PWB communication trouble (Protocol)
	81	Operation control PWB communication trouble (Parity)
	82	Operation control PWB communication trouble (Overrun)
	84	Operation control PWB communication trouble (Framing)
	88	Operation control PWB communication trouble (Time-out)
U95		Operation control PWB connection error
U99		Operation control PWB connection error

2. Details of trouble codes

Main code	Sub code		Detail of trouble
E1	00	Content	E1-**: Communication trouble between MCU and E-Sort.
		Detail	Communication setup error, framing, parity, protocol error
		Cause	E-Sort PWB connector disconnection E-Sort PWB MCU PWB harness failure E-Sort Motherboard connector pin breakage. E-Sort PWB ROM defect, data failure
		Check and remedy	Check the connectors and harness of the E-Sort PWB and the MCU PWB. Check grounding of the machine. Check the ROM of the E-Sort PWB.
	10	Content	E-Sort PWB trouble
		Detail	Communication trouble between MCU and E-Sort
		Cause	E-Sort PWB connector disconnection E-Sort PWB MCU PWB harness failure E-Sort Motherboard connector pin breakage. E-Sort PWB ROM defect, data failure
		Check and remedy	Check the connectors and harness of the E-Sort PWB and the MCU PWB. Check grounding of the machine. Check the ROM of the E-Sort PWB.
E11	11	Content	E-Sort PWB ASIC error
		Detail	E-Sort PWB ASIC abnormality
		Cause	An ASIC abnormality is detected in the E-Sort PWB. Control circuit hung up due to noises ASIC peripheral circuit error

Main code	Sub code		Detail of trouble
E11	11	Check and remedy	Replace the E-Sort PWB. Check grounding of the machine.
	12	Content	E-Sort PWB CODEC error
		Detail	E-Sort PWB CODEC error
		Cause	A CODEC error is detected in the E-Sort PWB. Control circuit hung up due to noises CODEC peripheral circuit error
		Check and remedy	Replace the E-Sort PWB. Check grounding of the machine.
	13	Content	E-Sort PWB Flash ROM error
		Detail	E-Sort PWB Flash ROM abnormality
		Cause	A Flash ROM abnormality is detected in the E-Sort PWB. Control circuit hung up due to noises Flash ROM peripheral circuit error
		Check and remedy	Replace the E-Sort PWB. Rewrite the flash ROM data. Check grounding of the machine.
	14	Content	E-Sort PWB Work RAM error
		Detail	E-Sort PWB Work RAM abnormality
		Cause	A Work RAM abnormality is detected in the E-Sort PWB. Control circuit hung up due to noises RAM peripheral circuit error
		Check and remedy	Replace the E-Sort PWB. Check grounding of the machine.
	15	Content	E-Sort PWB Page Memory error
		Detail	E-Sort PWB Page Memory abnormality
		Cause	A Page Memory abnormality is detected in the E-Sort PWB. Control circuit hung up due to noises Page Memory peripheral circuit error
		Check and remedy	Replace the E-Sort PWB. Check grounding of the machine.
	16	Content	E-Sort PWB SIMM error
		Detail	E-Sort PWB SIMM abnormality
		Cause	A SIMM abnormality is detected in the E-Sort PWB. Control circuit hung up due to noises SIMM peripheral circuit error
		Check and remedy	Replace the E-Sort PWB. Replace the SIMM. Check grounding of the machine.
	17	Content	E-Sort PWB image rotating RAM error
		Detail	E-Sort PWB image rotating RAM abnormality

Main code	Sub code		Detail of trouble
E11	17	Cause	A image rotating RAM abnormality is detected in the E-Sort PWB. Control circuit hung up due to noises Image rotating RAM peripheral circuit error
		Check and remedy	Replace the E-Sort PWB. Check grounding of the machine.
E1	80	Content	E-Sort PWB communication trouble (protocol)
		Detail	Communication trouble between MCU and printer PWB (Protocol error)
		Cause	E-Sort PWB connector disconnection E-Sort PWB MCU PWB harness failure E-Sort Motherboard connector pin breakage. E-Sort PWB ROM defect, data failure
		Check and remedy	Check the connectors and harness of the E-Sort PWB and the MCU PWB. Check grounding of the machine. Check the ROM of the E-Sort PWB.
	81	Content	E-Sort PWB communication trouble (Parity)
		Detail	Communication trouble between MCU and printer E-Sort (Parity error)
		Cause	E-Sort PWB connector disconnection E-Sort PWB MCU PWB harness failure E-Sort Motherboard connector pin breakage. E-Sort PWB ROM defect, data failure
		Check and remedy	Check the connectors and harness of the E-Sort PWB and the MCU PWB. Check grounding of the machine. Check the ROM of the E-Sort PWB.
	82	Content	E-Sort PWB communication trouble (Overrun)
		Detail	Communication trouble between MCU and E-Sort PWB (Overrun error)
		Cause	E-Sort PWB connector disconnection E-Sort PWB MCU PWB harness failure E-Sort Motherboard connector pin breakage. E-Sort PWB ROM defect, data failure

Main code	Sub code		Detail of trouble
E1	82	Check and remedy	Check the connectors and harness of the E-Sort PWB and the MCU PWB. Check grounding of the machine. Check the ROM of the E-Sort PWB.
	84	Content	E-Sort PWB communication trouble (Framing)
		Detail	Communication trouble between MCU and E-Sort PWB (Framing error)
		Cause	E-Sort PWB connector disconnection E-Sort PWB MCU PWB harness failure E-Sort Motherboard connector pin breakage. E-Sort PWB ROM defect, data failure
		Check and remedy	Check the connectors and harness of the E-Sort PWB and the MCU PWB. Check grounding of the machine. Check the ROM of the E-Sort PWB.
	88	Content	E-Sort PWB communication trouble (Time-out)
		Detail	Communication trouble between MCU and E-Sort PWB (Time-out error)
		Cause	E-Sort PWB connector disconnection E-Sort PWB MCU PWB harness failure E-Sort Motherboard connector pin breakage. E-Sort PWB ROM defect, data failure
		Check and remedy	Check the connectors and harness of the E-Sort PWB and the MCU PWB. Check grounding of the machine. Check the ROM of the E-Sort PWB.
E7	03	Content	LSU trouble
		Detail	After the polygon motor becomes active, BD signal (HSYNC) from the LSU is not detected at the specified times (41 ± 10 times within 20msec).
		Cause	LSU connector disconnection or LSU's inside harness disconnection or breakage Polygon motor rotation abnormality Improper positioning of the laser home position sensor in the LSU. Laser power voltage failure Laser emitting diode abnormality MCU PWB abnormality

Main code	Sub code		Detail of trouble
E7	03	Check and remedy	Improper connection of the LSU connector Check the polygon motor operation with SIM 25-10. Check printing with SIM64-1. Check laser emission of laser emitting diode. Check the LSU unit. Check the MCU PWB.
	04	Content	CCD white level trouble
		Detail	CCD white reference level which is read during the copy lamp lighting is abnormal.
		Cause	Flat cable installation failure to CCD unit Dirt on the mirror, lens, and reference white plate Copy lamp lighting failure CCD unit installation failure CCD unit abnormality MCU PWB abnormality
		Check and remedy	Clean the mirror, the lens, and the reference white plate. Check the copy lamp (SIM 5-3) ON. CCD unit check MCU PWB check
	05	Content	CCD black level trouble
		Detail	CCD black level which is read while the copy lamp is off is abnormal.
		Cause	Flat cable installation failure CCD unit abnormality MCU PWB abnormality
		Check and remedy	Check flat cable installation to the CCD unit. CCD unit check MCU PWB check
H2	00	Content	Thermistor open detection
		Detail	Fusing thermistor open
		Cause	Thermistor defect MCU PWB defect Fusing section connector contact failure Power failure Fusing unit not installed
		Check and remedy	Check the harness and the connector of the thermistor and the MCU. Clear the self diag display with SIM 14.
H3	00	Content	Heat roller abnormally high temperature
		Detail	Fusing temperature of 220 ~ 240˚C.
		Cause	Thermistor defect MCU PWB defect Fusing connector connection failure Power failure

Main code	Sub code		Detail of trouble
H3	00	Check and remedy	Check the heater lamp blinking with SIM 5-2. When the lamp blinks normally: Check the thermistor and the harness. Check the MCU PWB thermistor input circuit. When the lamp lights up instead of blinking: Check the lamp control circuit of the power PWB and the MCU PWB. Clear the trouble with SIM 14.
H4	00	Content	Heat roller abnormally low temperature
		Detail	When the temperature does not reach 155˚C within 55 sec after turning on the power, or when it falls under 145˚C during printing, or when it falls under 100˚C during pre-heating.
		Cause	Thermistor failure Heater lamp failure MCU PWB failure Thermostat failure Power failure Interlock switch failure
		Check and remedy	Check blinking of the heater lamp with SIM 5-2. When the lamp blinks normally: Check the thermistor and the harness. Check the MCU PWB thermistor input circuit. When the lamp does not light: Check for heater lamp disconnection or thermostat disconnection. Check the interlock switch. Check the power PWB and MCU PWB lamp control circuit. Clear the trouble with SIM 14.
L1	00	Content	Mirror base feed trouble
		Detail	The mirror home position (MHPS) does not turn off though the feed operation is completed during mirror initial operation after turning on the power. The mirror home position (MHPS) does not turn off during shading operation. The mirror home position (MHPS) does not turn on when the mirror base is returned for the specified time after copy feed is started and SPF scanning position shift is performed.
		Cause	Mirror unit defect Mirror home position sensor defect MCU PWB defect Scanner wire disconnection
		Check and remedy	Check the scanning operation with SIM 1-1.

Main code	Sub code		Detail of trouble
L3	00	Content	Mirror base return trouble
		Detail	The mirror home position (MHPS) does not turn on though the mirror base returning is completed during mirror initial operation after turning on the power. The mirror home position does not turn on when the mirror is returned to the home position during shading. The mirror home position (MHPS) does not turn on when the mirror base returning is completed for the specified time (about 6 sec) after copy return start.
		Cause	Mirror unit Mirror home position sensor defect MCU PWB defect Scanner wire disconnection
		Check and remedy	Check the scanning operation with SIM 1-1.
L4	01	Content	Main motor lock
		Detail	The main motor encoder pulse is not detected for 400msec.
		Cause	Main motor defect Harness disconnection between the MCU PWB and the main motor. Control circuit failure
		Check and remedy	Check the main motor operation with SIM 25-1. Check the harness and the connector between the MCU PWB and the main motor.
L6	10	Content	Polygon motor lock
		Detail	The lock signal (the specified rotation speed signal) is not supplied within the specified time (about 6 sec)after starting the polygon motor rotation.
		Cause	LSU connector disconnection or harness disconnection in the LSU.
		Check and remedy	Check the operation of the polygon motor with SIM 25-10. Check the harness and the connector connection. LSU replacement
L8	01	Content	Zero cross pulse (FW) trouble
		Detail	Zero cross pulse width is shifted by 55Hz ± 10% or more.
		Cause	MCU PWB defect Power unit breakdown
		Check and remedy	Check the harness and the connector. MCU PWB replacement Power unit replacement
U2	04	Content	EEPROM serial communication error
		Detail	Error in communication with EEPROM

Main code	Sub code		Detail of trouble
U2	04	Cause	EEPROM failure Installation of uninitialized EEPROM MCU PWB EERPOM access circuit failure
		Check and remedy	Check that the EEPROM is properly set. To prevent against loss of counter/adjustment values, record the values with simulation. U2 trouble cancel with SIM 16 MCU PWB replacement
	11	Content	Counter check sum error
		Detail	Counter check sum value stored in the EEPROM is abnormal.
		Cause	EEPROM failure Control circuit hung up by noises MCU PWB EEPROM access circuit defect
		Check and remedy	Check that the EEPROM is properly set. To prevent against loss of counter/adjustment values, record the values with simulation. U2 trouble cancel with SIM 16 MCU PWB replacement
	12	Content	Adjustment value check sum error (EEPROM)
		Detail	Adjustment value data area check sum error
		Cause	EEPROM failure Control circuit hung up by noises MCU PWB EEPROM access circuit failure
		Check and remedy	Check that the EEPROM is properly set. To prevent against loss of counter/adjustment values, record the values with simulation. U2 trouble cancel with SIM 16 MCU PWB replacement
U3	29	Content	Mirror base home position error
		Detail	Home position is not detected when starting mirror base shift.
		Cause	Mirror unit defect Mirror home position sensor defect MCU PWB decfect Scanner wire disconnection
		Check and remedy	Check the scanning operation with SIM 1-1.
U9	00	Content	U9-** Communication trouble between MCU and OPE (OPE detection)
		Detail	Communication setup error, framing, parity, protocol error
		Cause	Operation control PWB connector disconnection Operation control PWB MCU PWB harness failure

Main code	Sub code		Detail of trouble
U9	00	Check and remedy	Check the connectors and harness of the operation control PWB and the MCU PWB. Check grounding of the machine. Check the ROM of the operation control PWB.
	80	Content	Operation control PWB communication trouble (Protocol)
		Detail	Communication trouble between MCU and the operation control PWB (Protocol error)
		Cause	Operation control PWB connector disconnection Operation control PWB MCU PWB harness failure
		Check and remedy	Check the connectors and harness of the operation control PWB and the MCU PWB. Check grounding of the machine.
	81	Content	Operation control PWB communication trouble (Parity)
		Detail	Communication trouble between MCU and the operation control PWB (Parity error)
		Cause	Operation control PWB connector disconnection Operation control PWB MCU PWB harness failure
		Check and remedy	Check the connectors and harness of the operation control PWB and the MCU PWB. Check grounding of the machine.
	82	Content	Operation control PWB communication trouble (Overrun)
		Detail	Communication trouble between MCU and the operation control PWB (Overrun error)
		Cause	Operation control PWB connector disconnection Operation control PWB MCU PWB harness failure
		Check and remedy	Check the connectors and harness of the operation control PWB and the MCU PWB. Check grounding of the machine.
	84	Content	Operation control PWB communication trouble (Framing)
		Detail	Communication trouble between MCU and the operation control PWB (Framing error)
		Cause	Operation control PWB connector disconnection Operation control PWB MCU PWB harness failure
		Check and remedy	Check the connectors and harness of the operation control PWB and the MCU PWB. Check grounding of the machine.

Main code	Sub code		Detail of trouble
U9	88	Content	Operation control PWB communication trouble (Time-out)
		Detail	Communication trouble between MCU and the operation PWB (Time-out error)
		Cause	Operation control PWB connector disconnection Operation control PWB MCU PWB harness failure
		Check and remedy	Check the connectors and harness of the operation control PWB and the MCU PWB. Check grounding of the machine.
F6	00	Content	F6**: Communication trouble between MCU and FAX (MCU detection)
		Detail	Communication establishment error, framing error, parity error, protocol error
		Cause	Bad connection of FAX control PWB connector Defective harness between FAX control PWB and MCU PWB. Motherboard connector pin breakage FAX control PWB ROM error, data error
		Check and remedy	Check connector/harness of FAX control PWB and MCU PWB. Check grounding of the machine. Check FAX control PWB ROM.
	10	Content	FAX control PWB trouble
		Detail	Communication trouble between MCU and FAX control WPB
		Cause	Bad connection of FAX control PWB connector Defective harness between FAX control PWB and MCU PWB Motherboard connector pin breakage FAX control PWB ROM error/Data error
		Check and remedy	Check connector/harness between FAX control PWB and MCU PWB. Check grounding of the machine. Check FAX control PWB ROM.
	80	Content	FAX control PWB communication trouble (Protocol)
		Detail	Communication trouble between MCU and FAX control PWB (Protocol error)
		Cause	Bad connection of FAX control PWB connector Defective harness between FAX control PWB and MCU PWB Motherboard connector pin breakage FAX control PWB ROM error/Data error
		Check and remedy	Check connector/harness between FAX control PWB and MCU PWB. Check grounding of the machine. Check FAX control PWB ROM.

Main code	Sub code		Detail of trouble
F6	81	Content	FAX control PWB communication trouble (Parity)
		Detail	Communication trouble between MCU and FAX control PWB (Parity error)
		Cause	Bad connection of FAX control PWB connector Defective harness between FAX control PWB and MCU PWB Motherboard connector pin breakage FAX control PWB ROM error/Data error
		Check and remedy	Check connector/harness between FAX control PWB and MCU PWB. Check grounding of the machine. Check FAX control PWB ROM.
	82	Content	FAX control PWB communication trouble (Overrun)
		Detail	Communication trouble between MCU and FAX control PWB (Overrun error)
		Cause	Bad connection of FAX control PWB connector Defective harness between FAX control PWB and MCU PWB Motherboard connector pin breakage FAX control PWB ROM error/Data error
		Check and remedy	Check connector/harness between FAX control PWB and MCU PWB. Check grounding of the machine. Check FAX control PWB ROM.
	84	Content	FAX control PWB communication trouble (Framing)
		Detail	Communication trouble between MCU and FAX control PWB (Framing error)
		Cause	Bad connection of FAX control PWB connector Defective harness between FAX control PWB and MCU PWB Motherboard connector pin breakage FAX control PWB ROM error/Data error
		Check and remedy	Check connector/harness between FAX control PWB and MCU PWB. Check grounding of the machine. Check FAX control PWB ROM.
	88	Content	FAX control PWB communication trouble (Timeout)
		Detail	Communication trouble between MCU and FAX control PWB (Timeout error)
		Cause	Bad connection of FAX control PWB connector Defective harness between FAX control PWB and MCU PWB Motherboard connector pin breakage FAX control PWB ROM error/Data error

Main code	Sub code		Detail of trouble
F6	88	Check and remedy	Check connector/harness between FAX control PWB and MCU PWB. Check grounding of the machine. Check FAX control PWB ROM.
F9	00	Content	F9: Communication trouble between MCU and printer PWB (MCU detection)
		Detail	Communication establishment error, framing error, parity error, protocol error
		Cause	Bad connection of printer PWB connector Defective harness between printer PWB and MCU PWB. Motherboard connector pin breakage Printer PWB ROM error, data error
		Check and remedy	Check connector/harness of printer PWB and MCU PWB. Check grounding of the machine. Check printer PWB ROM.
	10	Content	Printer PWB trouble
		Detail	Communication trouble between MCU and printer PWB
		Cause	Bad connection of printer PWB connector Defective harness between printer PWB and MCU PWB. Motherboard connector pin breakage Printer PWB ROM error, data error
		Check and remedy	Check connector/harness of printer PWB and MCU PWB. Check grounding of the machine. Check printer PWB ROM.
	80	Content	Printer PWB communication trouble (Protocol)
		Detail	Communication trouble between MCU and printer PWB (Protocol error)
		Cause	Bad connection of printer PWB connector Defective harness between printer PWB and MCU PWB. Motherboard connector pin breakage Printer PWB ROM error, data error
		Check and remedy	Check connector/harness of printer PWB and MCU PWB. Check grounding of the machine. Check printer PWB ROM.

[10] MAINTENANCE

1. Maintenance table

×: Check (Clean, adjust, or replace when required.) ○ : Clean ▲: Replace △ : Adjust ☆: Lubricate

Unit name	Part name		When calling or replacing the kit	150k
Transfer section		Charger unit	○	○
		Transfer paper guide	○	○
Optical section	Lamp unit	Reflector	○	○
		Mirror	○	○
	No. 2/3 mirror unit	Mirror	○	○
		Pulley	×	×
	CCD peripheral	Lens	○	○
	Glass	Table glass	○	○
		White plate	○	○
	Other	Drive wire	×	×
		Rail	×☆	×☆
		Document cover	○	○
		Document size sensor	○	○
LSU		Dust-proof glass	○	○
Paper feed section	Multi paper feed section	Takeup roller	○	○
		Paper feed roller	○	○
		Spring clutch	○☆	○☆
	Cassette section	Paper feed roller	○	○
		Spring clutch	○☆	○☆
Paper transport section		PS roller	○	○
		Transport (paper exit) rollers	○	○
		Spring clutch	○☆	○☆
Fusing section		Upper heat roller	○	▲
		Pressure roller	○	○
		Pressure roller bearing	×	○☆
		Upper separation pawl	×	○
		Lower separation pawl	×	○
Drive section		Gears	×☆	×☆
		Belts	×	○
Paper exit section		Ozone filter	×	× *

*1: Recommendable replacement time: 30K (A4 (8.5" × 11"), 6% print)

[11] DISASSEMBLY AND ASSEMBLY

WARNING: Before performing the disassembly procedure, be sure to remove the power cord to prevent against an electric shock.

No.	Item	Page
1	High voltage section/Duplex transport section	12-1
2	Optical section	12-1
3	Fusing section	12-2
4	Paper exit section	12-4
5	MCU	12-6
6	Optical frame unit	12-6
7	LSU	12-6
8	Tray paper feed section/Paper transport section	12-7
9	Manual multi paper feed section	12-8
10	Power section	12-10
11	Developing section	12-11
12	Process section	12-12

1. High voltage section/Duplex transport section

No.	Content
A	Transfer charger unit
B	Charger wire
C	Duplex transport section <Only AR-205>

A. Transfer charger unit

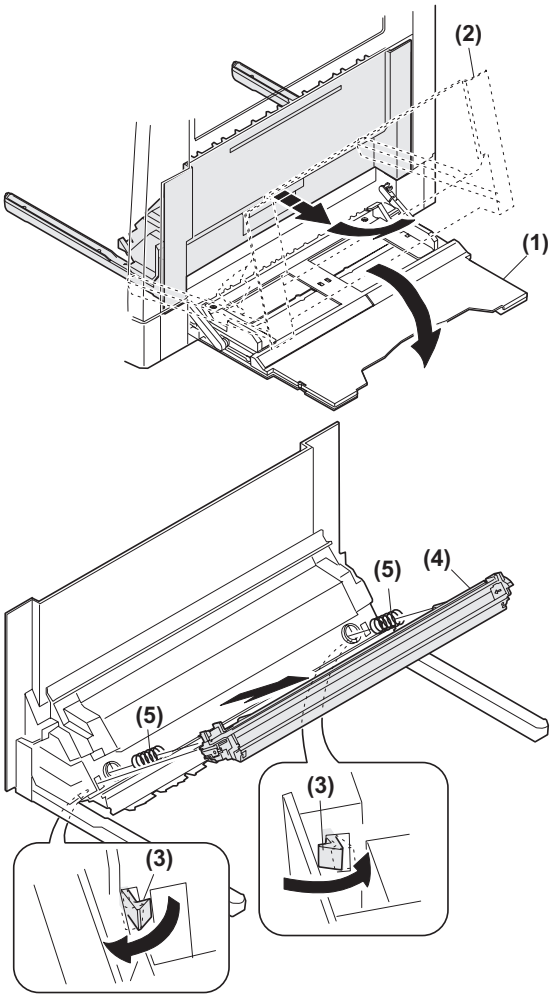

B. Charger wire

Installation: The spring tip must be between two reference ribs.

- The charger wire must be free from twist or bending.
- Be sure to put the charger wire in the V groove.

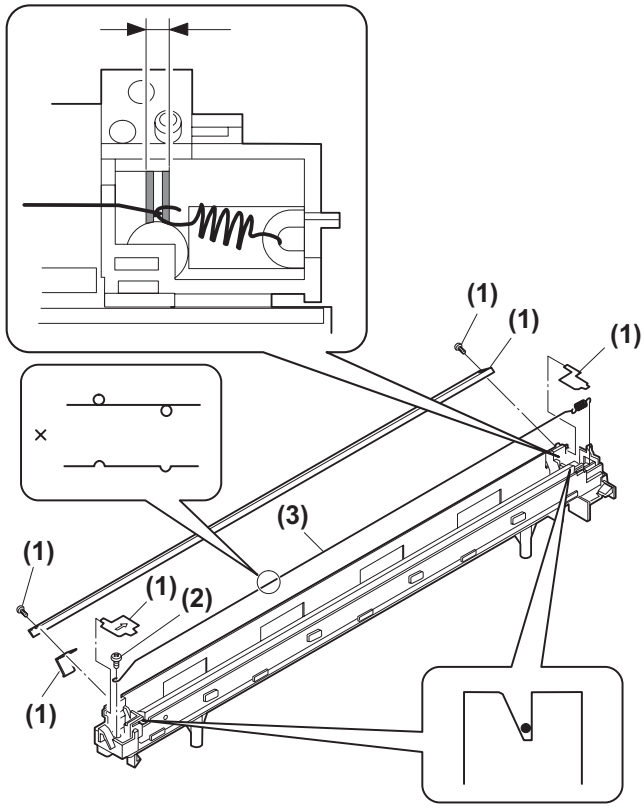

C. Duplex transport section <Only AR-205>

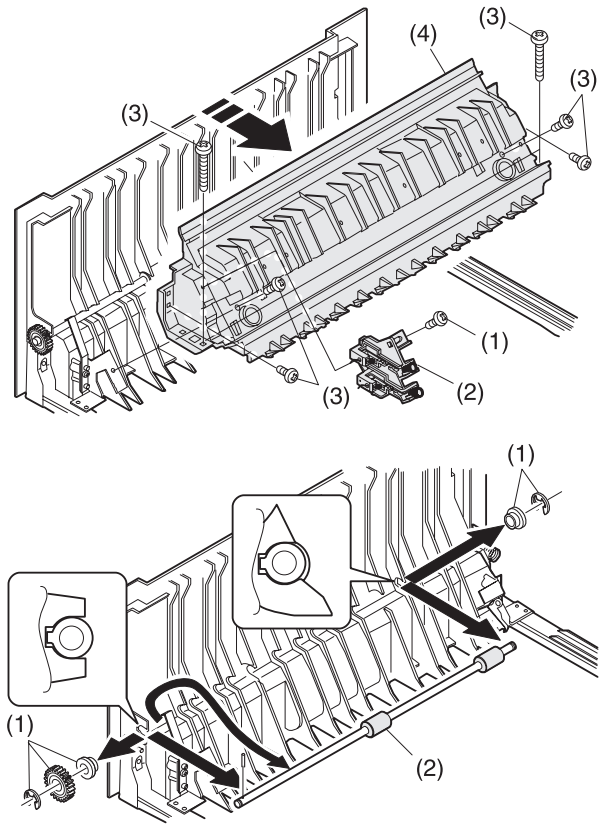

2. Optical section

No.	Content
A	Table glass
B	Copy lamp unit
C	Copy lamp
D	Lens unit

A. Table glass

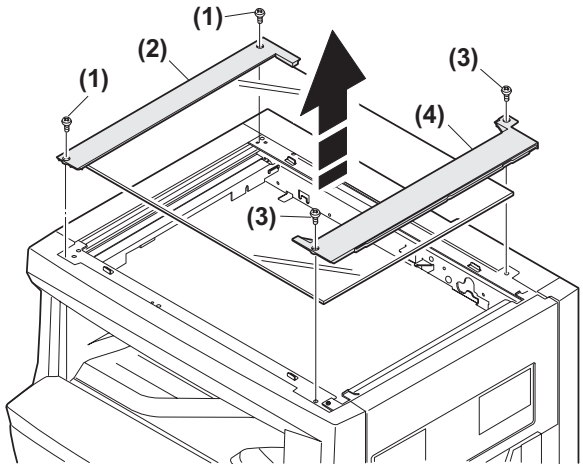

B. Copy lamp unit

Disassembly: Be sure to put No. 2/3 mirror unit to the positioning plate (A).

Assembly: Put the notched surface of wire holder (3) downward, tighten temporarily, and install.

Adjustment: Main scanning direction distortion balance adjustment

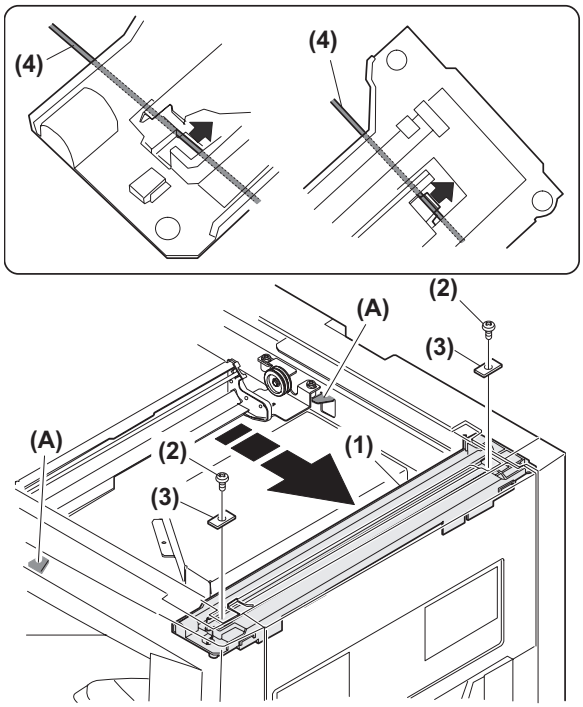

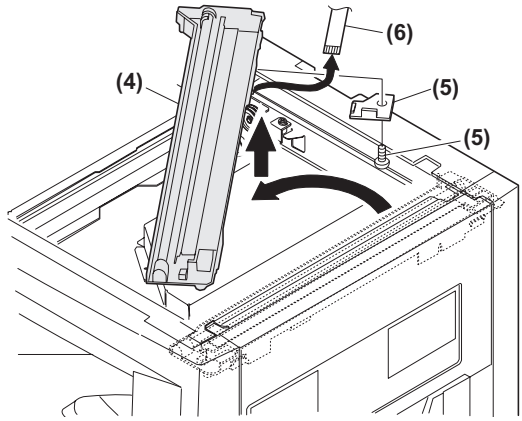

C. Copy lamp

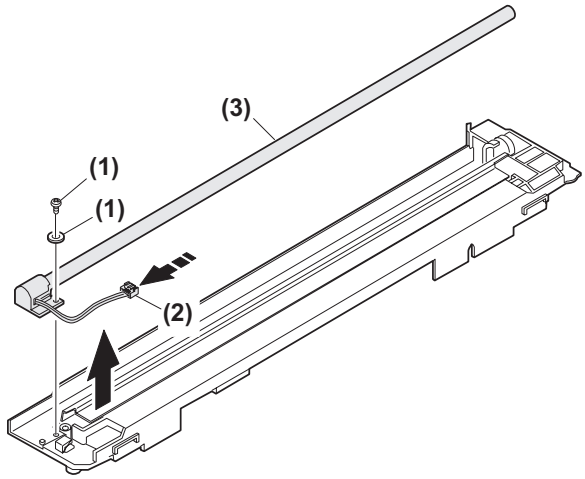

D. Lens unit

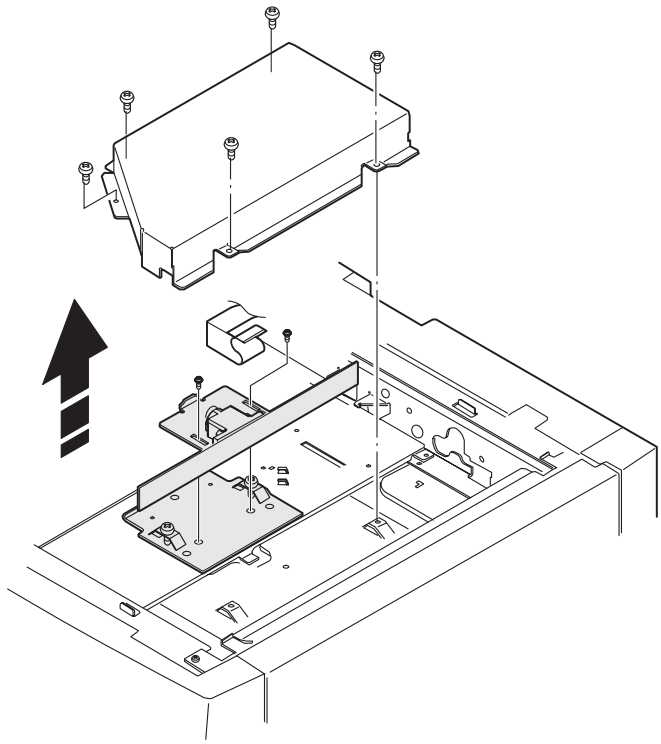

Lens unit attachment reference

Attach the lens unit so that the lens unit number on the lens adjustment plate is aligned with the scribe line on the base plate.

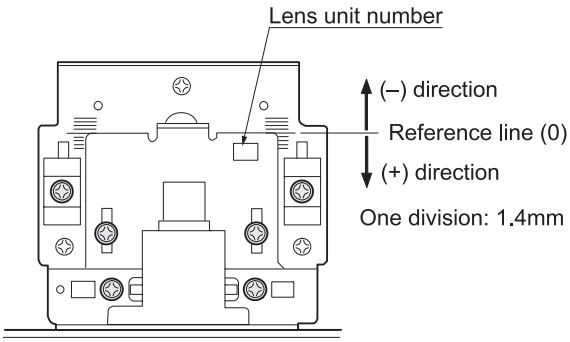

Example: Lens unit number –2.8
Attach the lens unit at 2 scales in the paper exit direction from the reference line.

Note: Never touch the other screws than the unit attachment screw.
The lens unit is supplied only in a whole unit.

3. Fusing section

No.	Contents
A	Fusing unit
B	Thermostat
C	Thermistor
D	Heater lamp
E	Upper heat roller
F	Separation pawl
G	Lower heat roller

A. Fusing unit removal

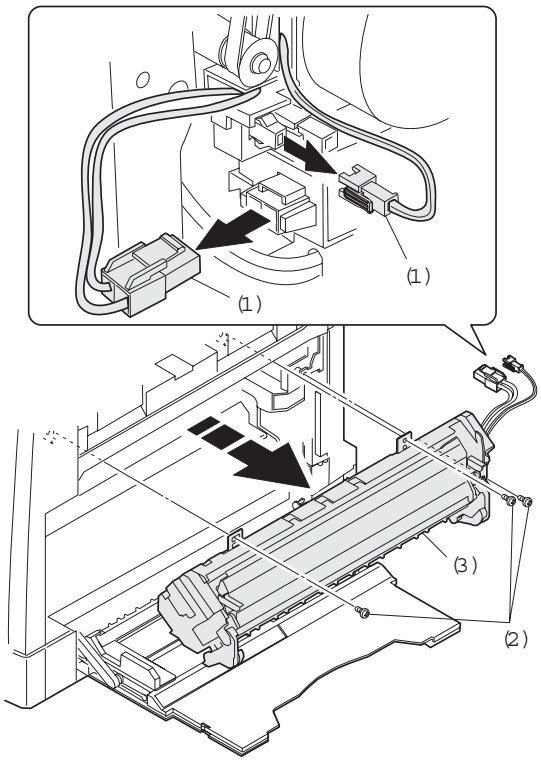

B. Thermostat

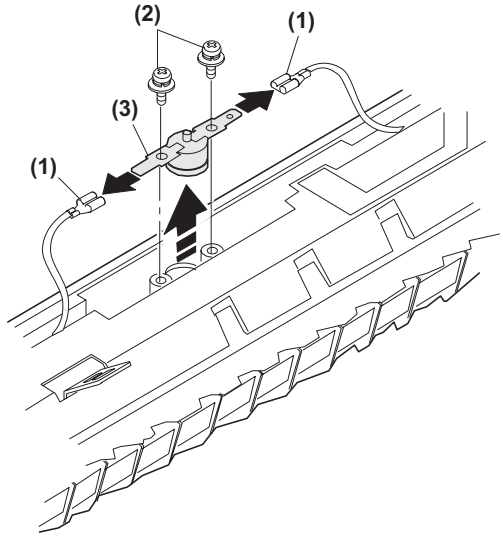

C. Thermistor

Installation: Check that the thermistor is in contact with the upper heat roller.

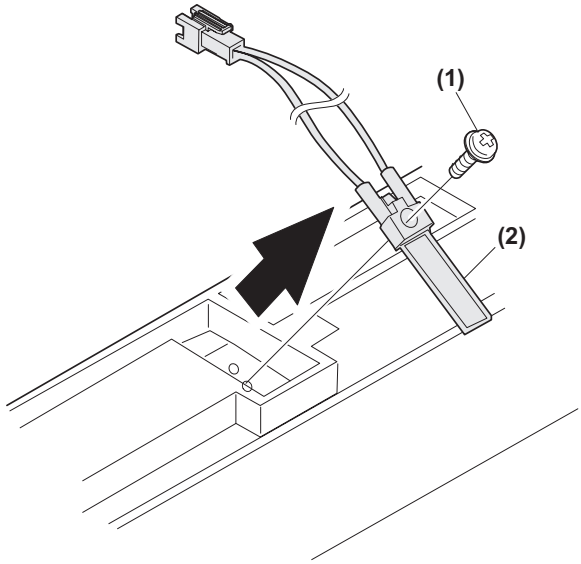

D. Heater lamp

Assembly: Insert the spring (A) into the hole (B) in the fusing frame.

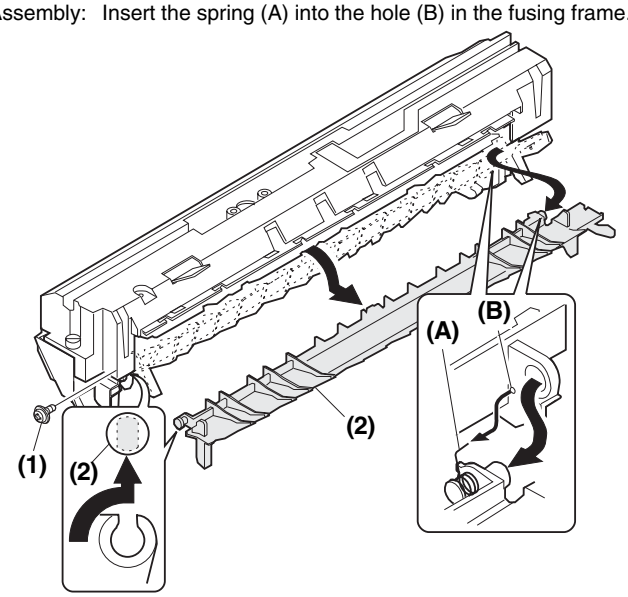

Assembly: Put the paper guide earth spring (A) under the paper guide (B) before fusing.

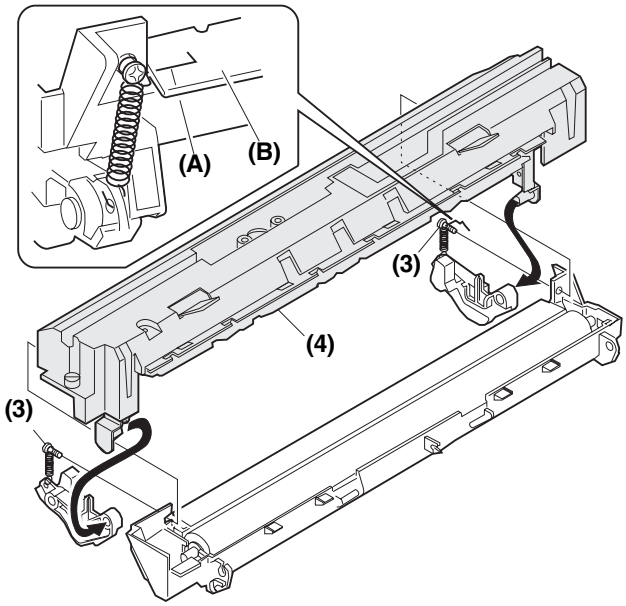

Disassembly: There are three pawls on the fusing cover. Remove the screws and slide the fusing cover to the right to remove.
The heater lamp is fixed on the fusing cover with a screw. Slide the fusing cover to the front and remove the screw, then remove the heater lamp.

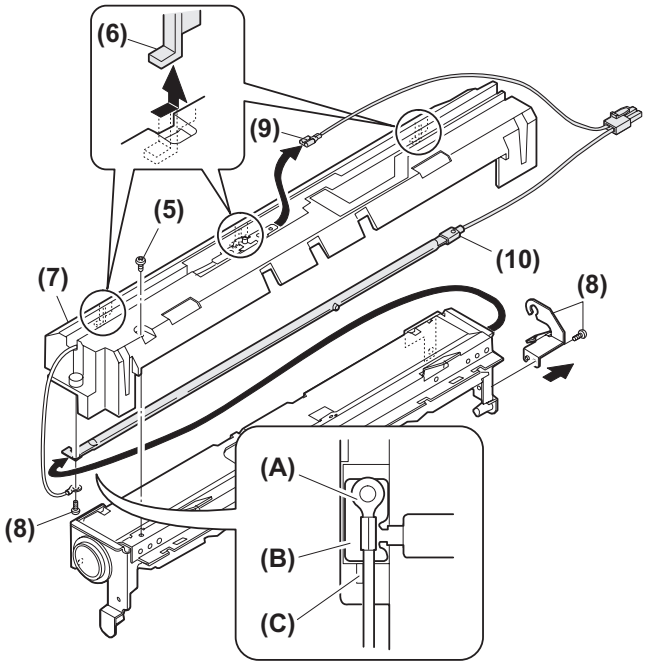

Assembly: Put the fusing harness (A) on the heater lamp (B) as shown in the figure and fix them together.
Place the fusing harness inside the rib (C).

E. Upper heat roller

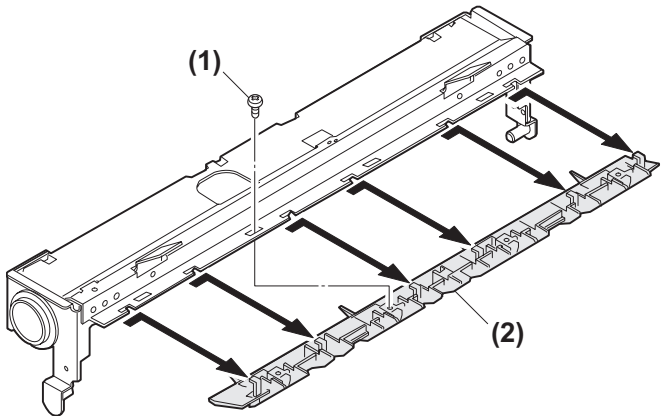

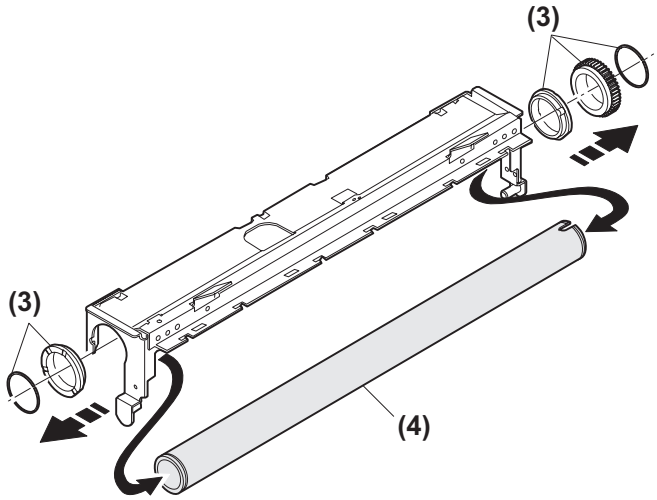

F. Separation pawl

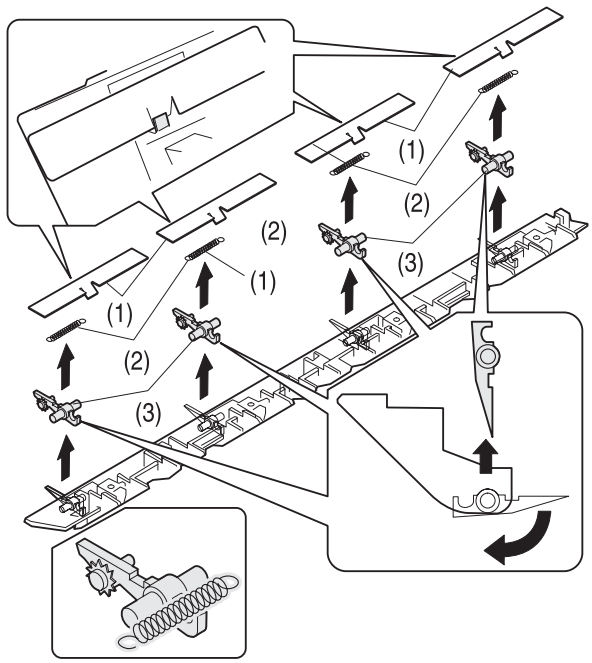

G. Lower heat roller

Assembly: When installing the paper guide (3) before fusing, tighten the paper guide fixing plate so that the paper guide fixing plate (2) is in contact with the frame bottom section (A) under fusing.

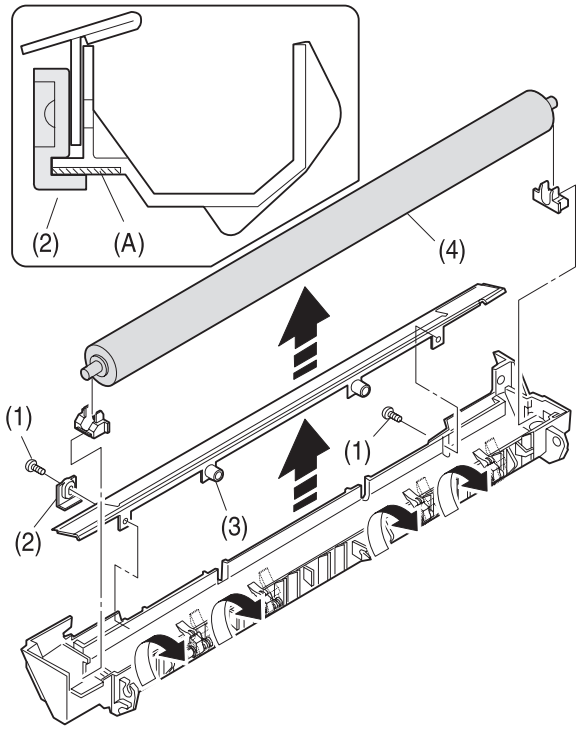

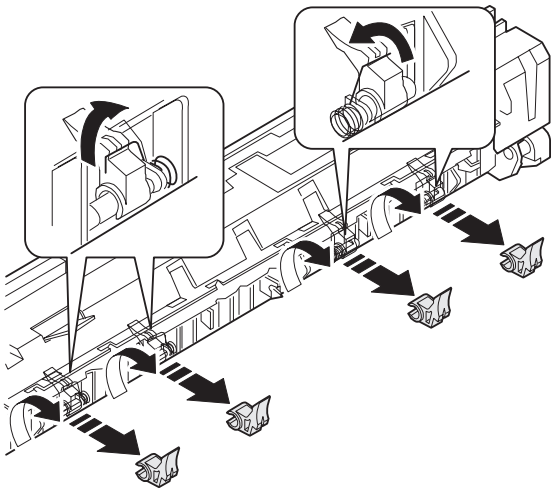

4. Paper exit section

No.	Content
A	Front cabinet unit/Right cabinet unit
B	Ozone filter
C	Paper exit unit
D	Transport roller
E	Paper exit roller

A. Front cabinet unit, right cabinet disassembly

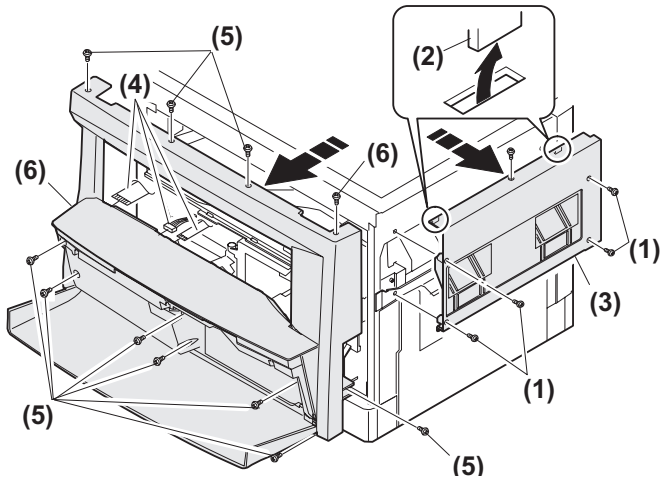

B. Ozone filter

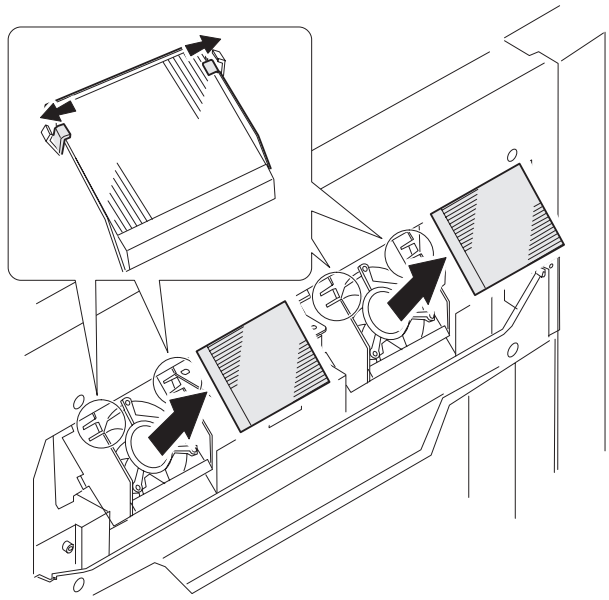

C. Paper exit unit

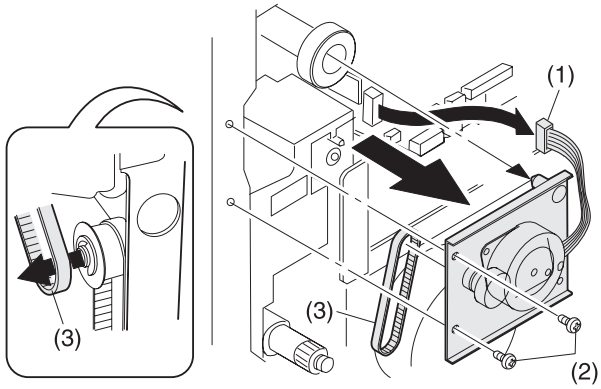

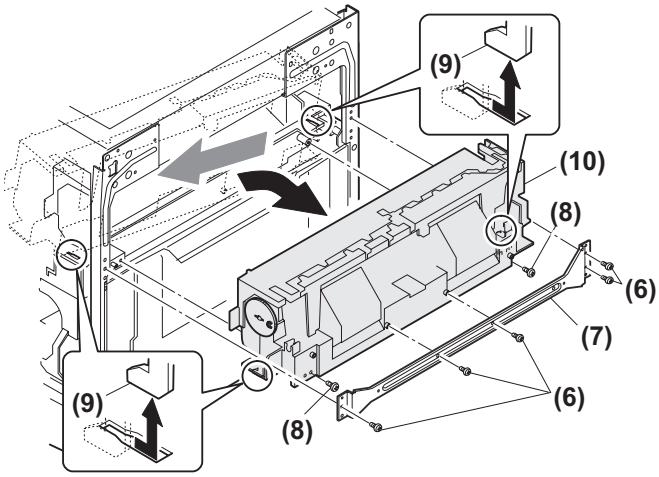

D. Transport roller

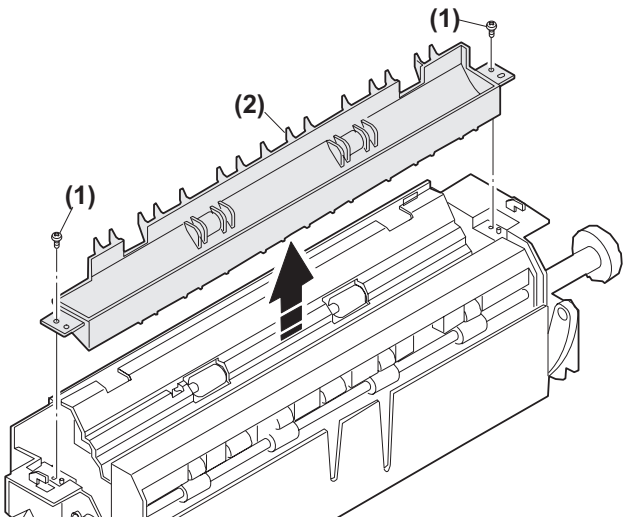

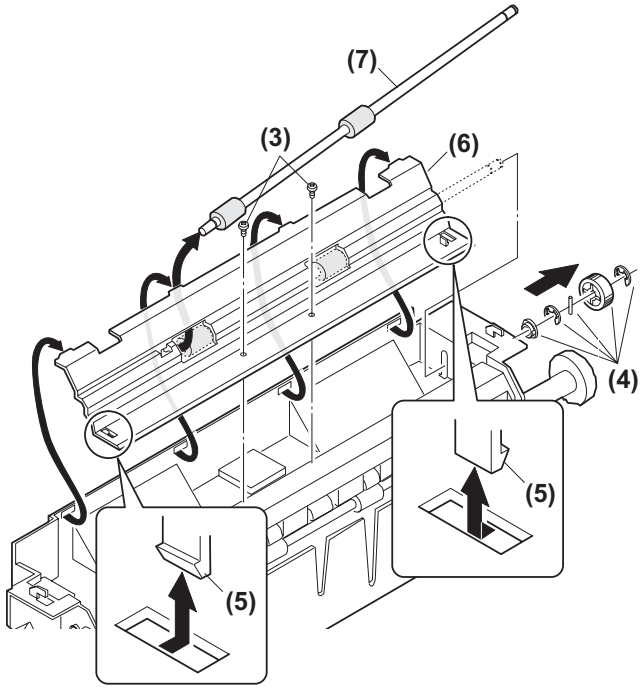

E. Paper exit roller

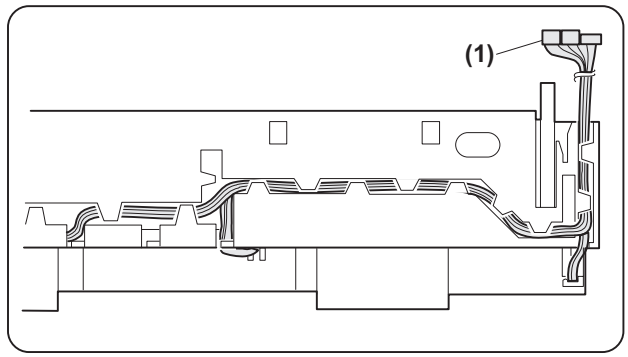

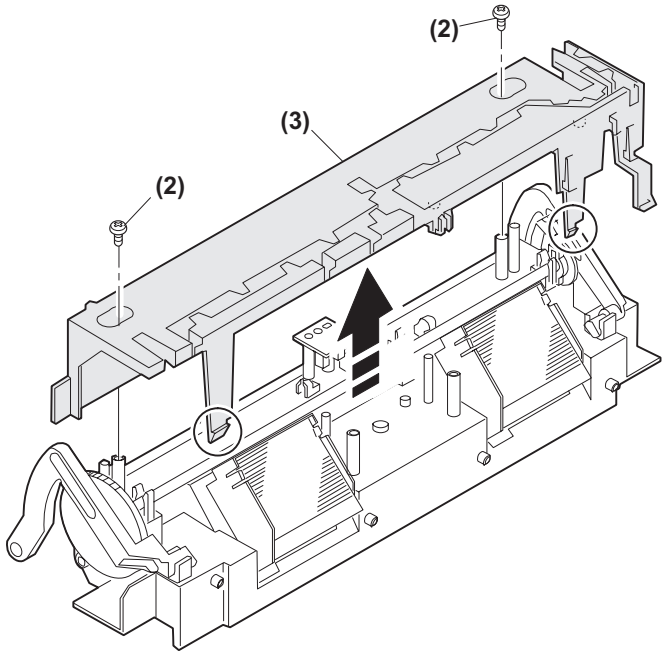

Assembly: Insert the spring pin so that the waveform (A) of the spring pin faces in the longitudinal direction of the paper exit drive gear long hole (B).
Be sure to insert two ribs (C) into the groove (D).

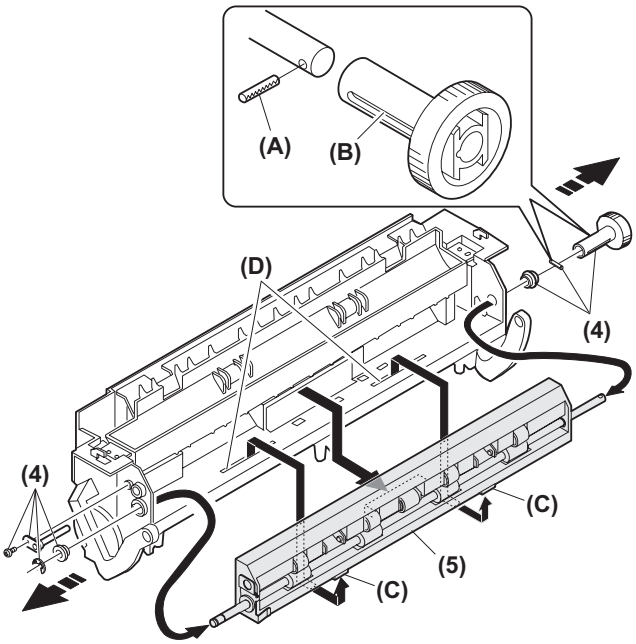

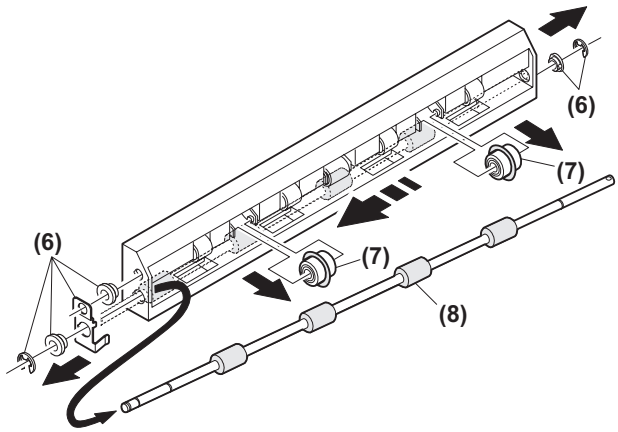

5. MCU

No.	Content
A	MCU

A. MCU disassembly

Note: When replacing the MCU PWB, be sure to replace the EEPROM of the MCU PWB to be replaced.

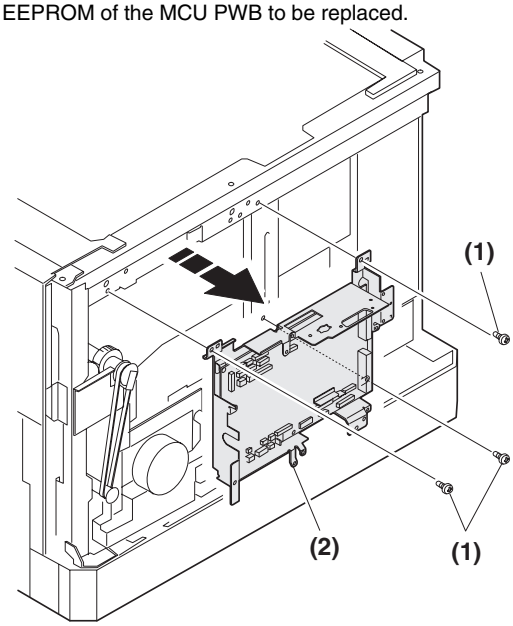

6. Optical frame unit

No.	Content
A	Optical frame unit

A. Optical frame unit

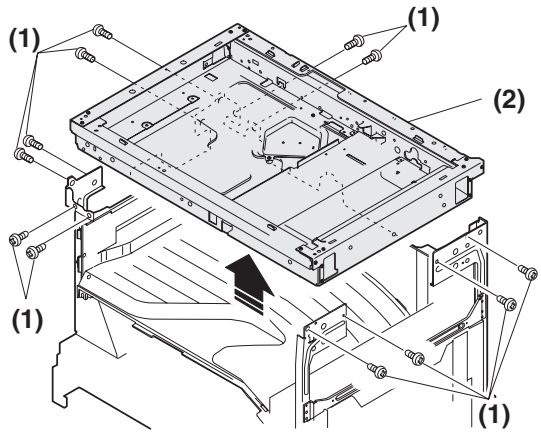

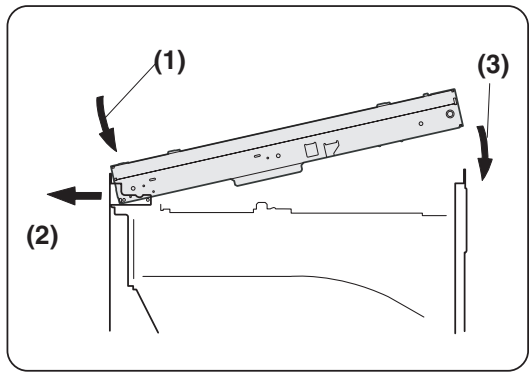

Installation: Install the optical unit in the sequence shown above.

7. LSU

No.	Content
A	LSU unit

A. LSU unit

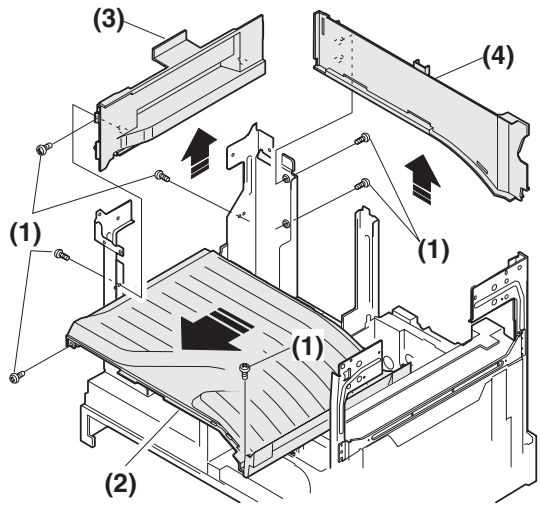

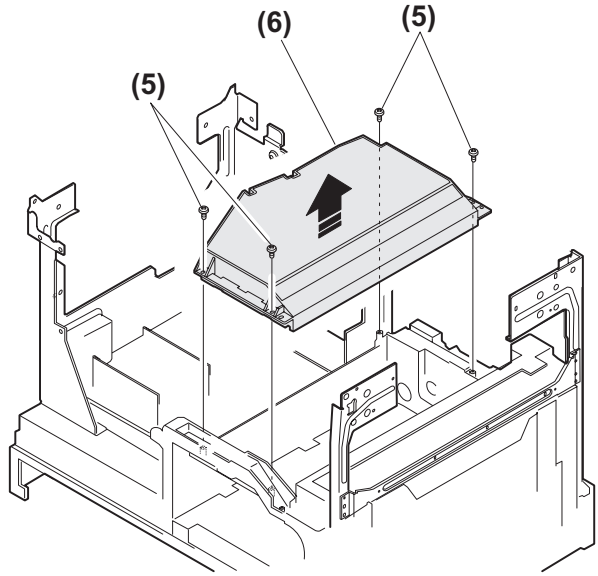

Adjustment:
- Image lead edge position adjustment
- Image left edge position adjustment
- Paper off-center adjustment

8. Tray paper feed section/Paper transport section

No.	Content
A	Interface frame unit
B	Drive unit
C	Solenoid (paper feed solenoid, resist roller solenoid)
D	Resist roller clutch , Resist roller
E	Paper feed clutch/Paper feed roller (Semi-circular roller)

A. Intermittent frame unit

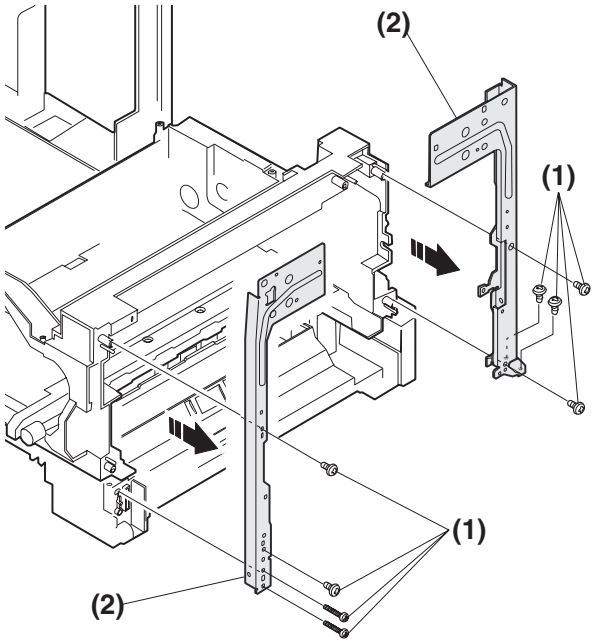

Assembly: Do not miss the door lock pawl.

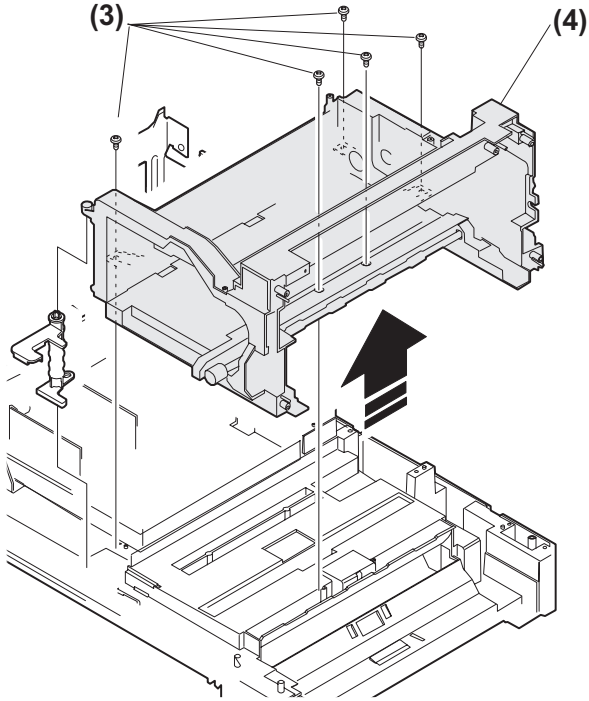

B. Drive unit

Assembly: Move down the clutch pawl as shown below, and avoid the clutch and install.

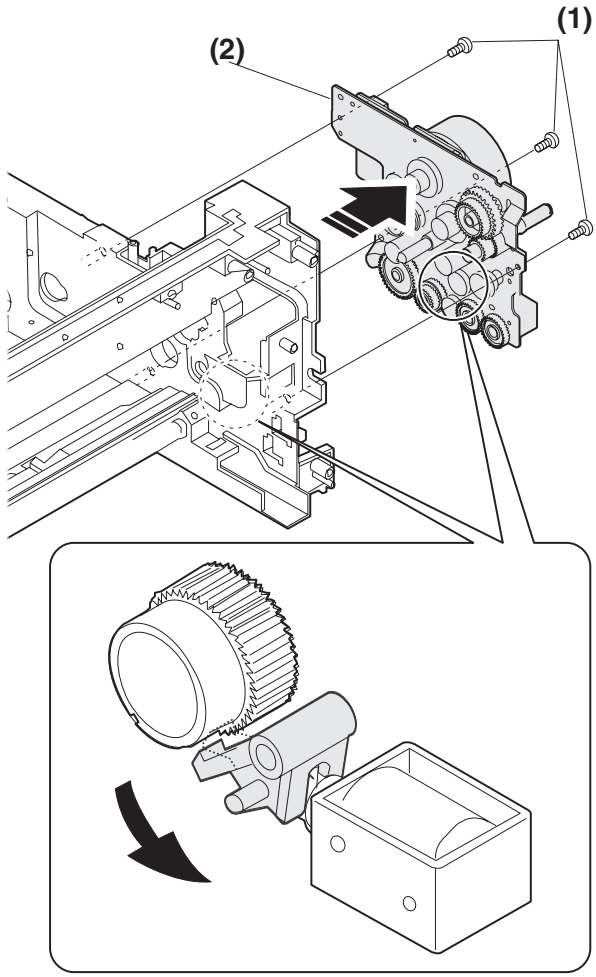

C. Solenoid (paper feed solenoid, resist roller solenoid)

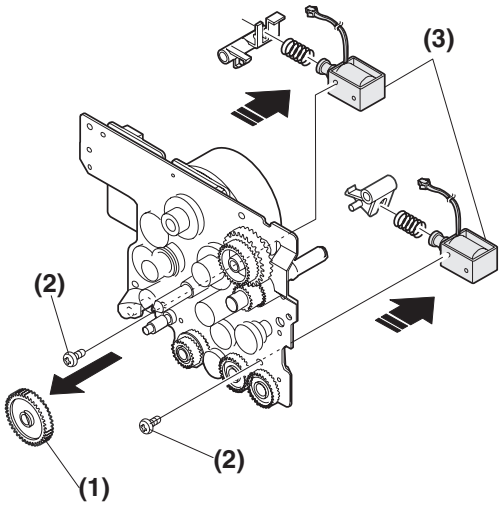

D. Resist roller clutch/Resist roller

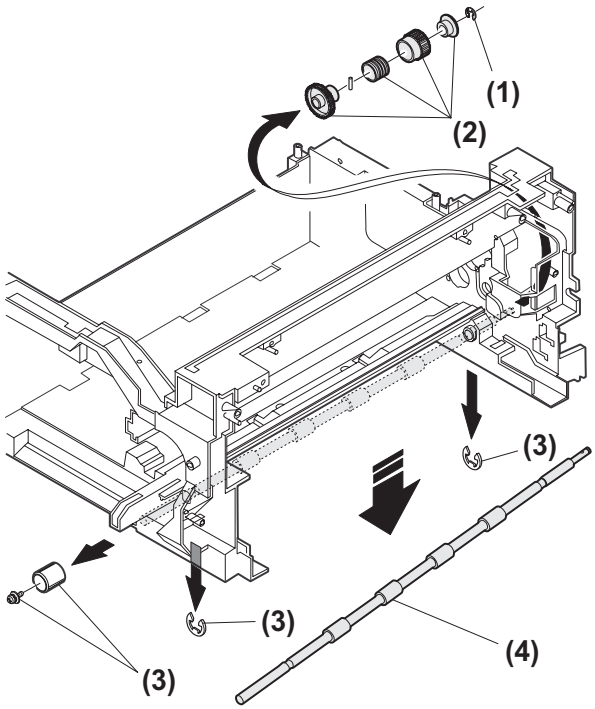

E. Paper feed clutch/Paper feed roller (Semi-circular roller)

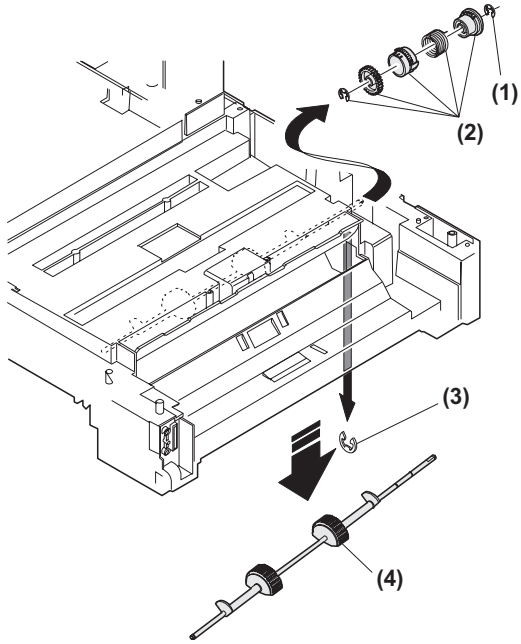

9. Manual multi paper feed section

No.	Content
A	Manual multi paper feed section
B	Manual transport clutch
C	Manual paper feed clutch
D	Manual transport roller/Manual paper feed roller
E	Multi feed solenoid

A. Manual multi paper feed

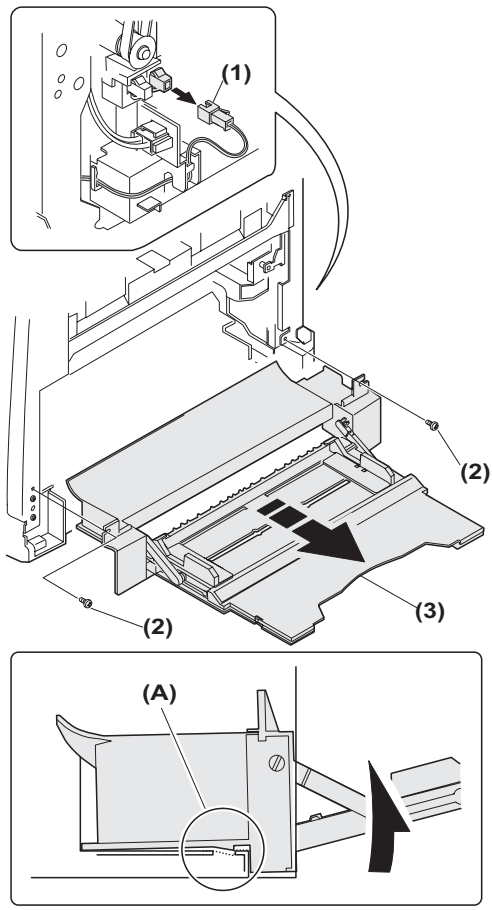

B. Manual transport clutch

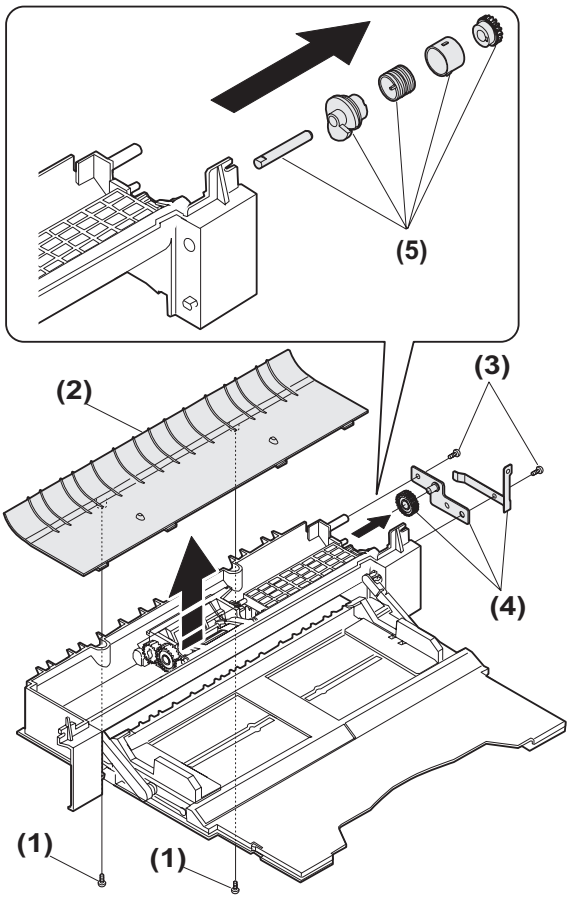

C. Manual paper feed clutch

Disassembly: Set up the shutter arm (1) then remove it.

Assembly: Install so that the boss section of the fulcrum arm (2) comes between ribs.

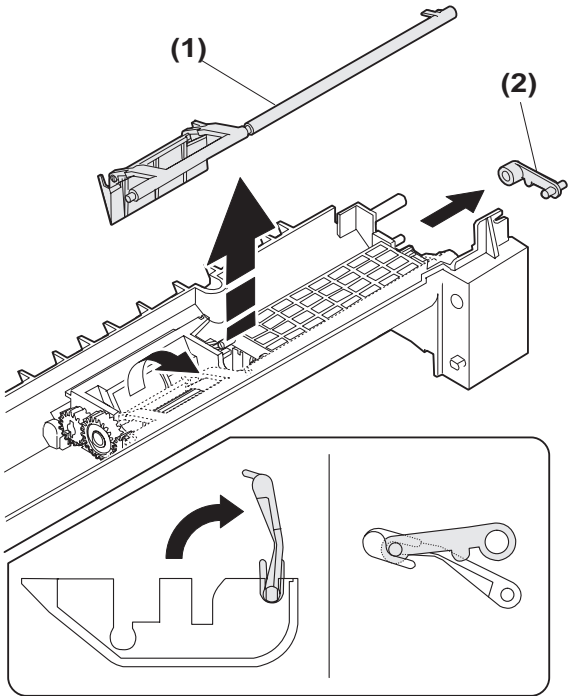

Disassembly: Set up the cam transmission arm (2), and remove it.

Assembly: Install so that the cam transmission arm (2) is under the roller arm (A).

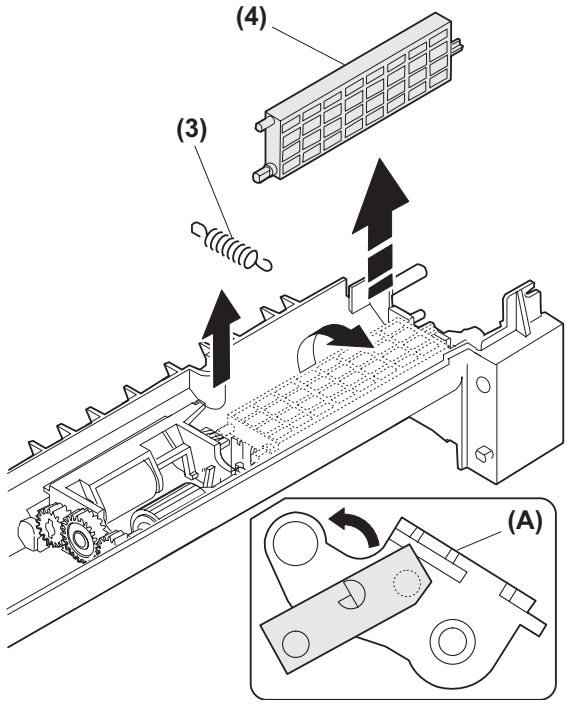

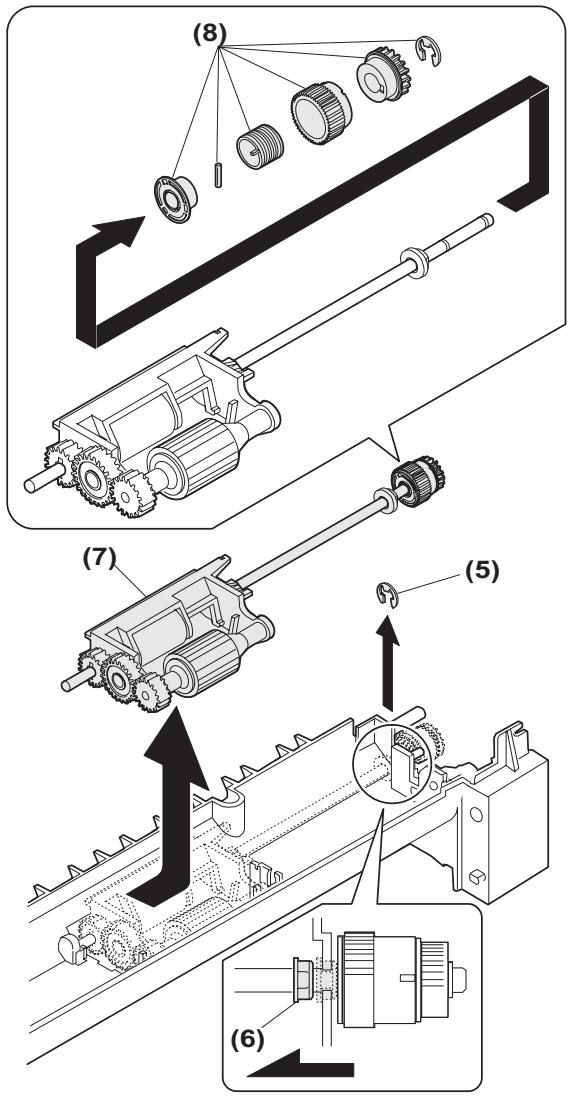

D. Manual transport roller/Manual paper feed roller

Installation: Be careful of the installing direction of the manual transport roller (4).

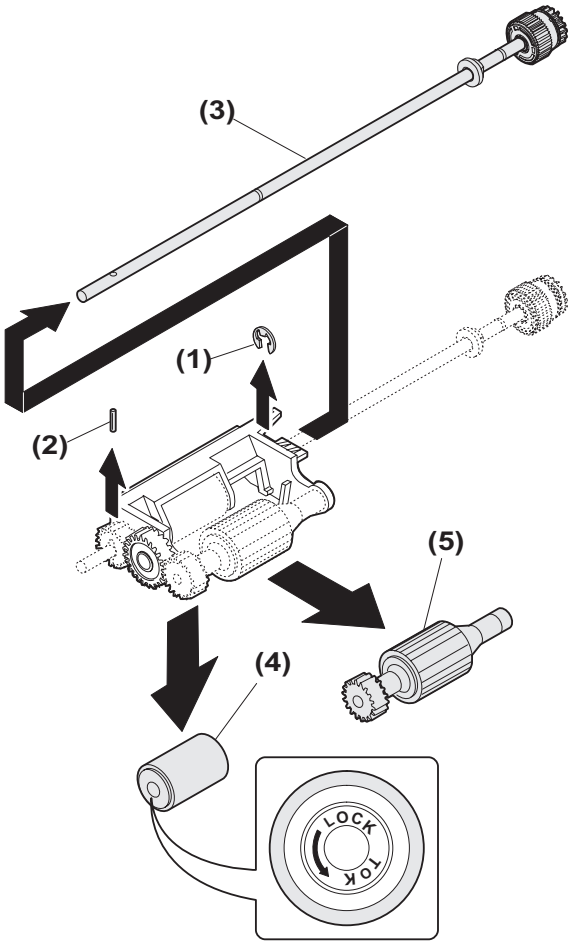

E. Multi feed solenoid

Assembly: Install so that the latches (A) and (B) move smoothly.

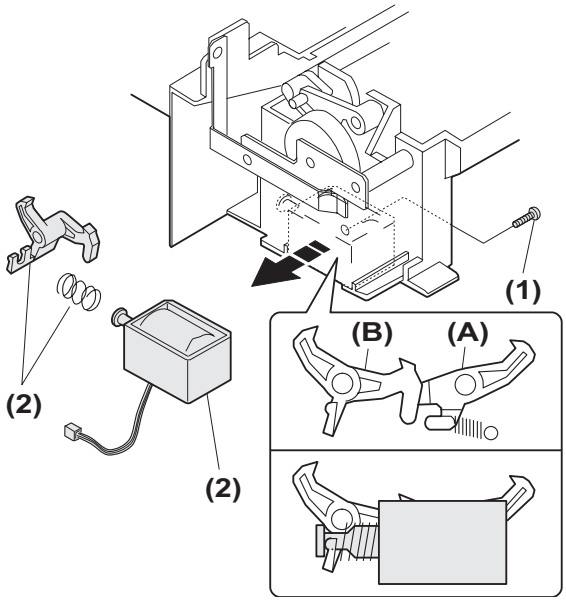

10. Power section

No.	Content
A	Power unit

A. Power unit

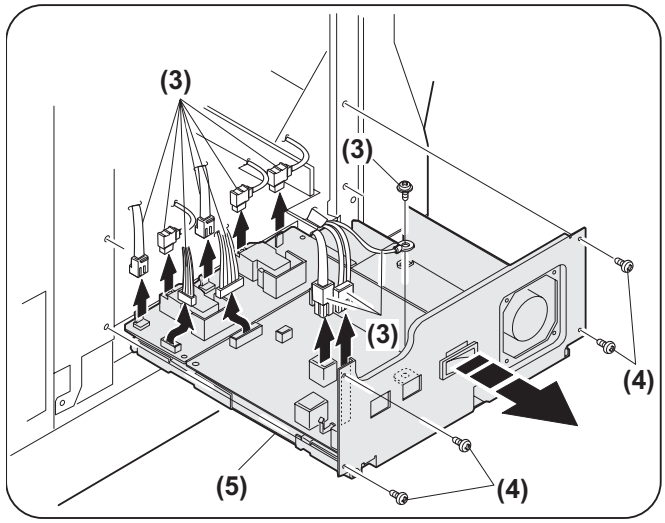

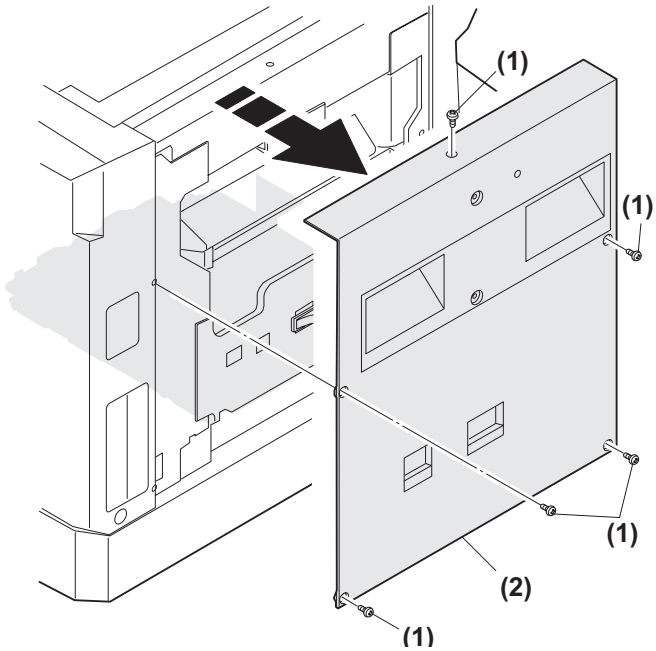

11. Developing section

No.	Contents
A	Waste toner box
B	Developing box
C	Developing doctor
D	MG roller

A. Waste toner box

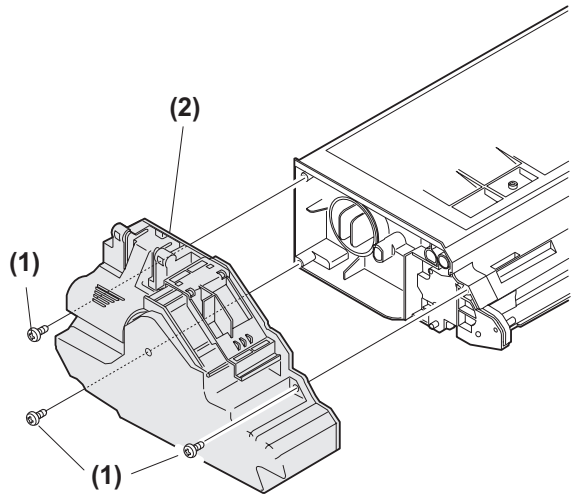

B. Developing box

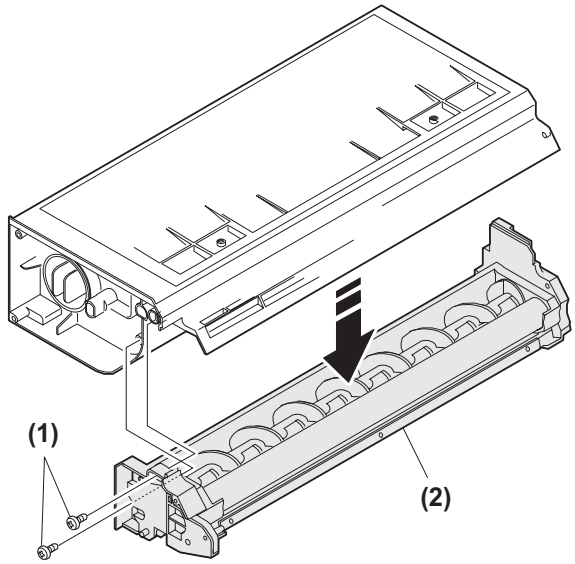

C. Developing doctor

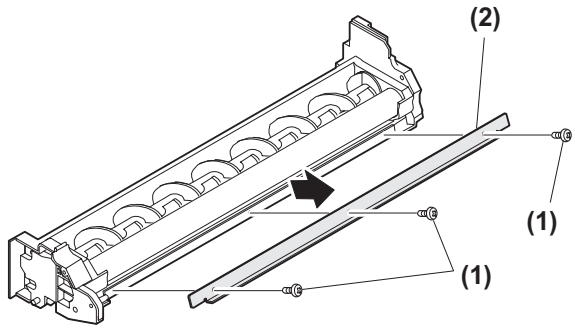

Adjustment: Developing doctor gap adjustment

D. MG roller

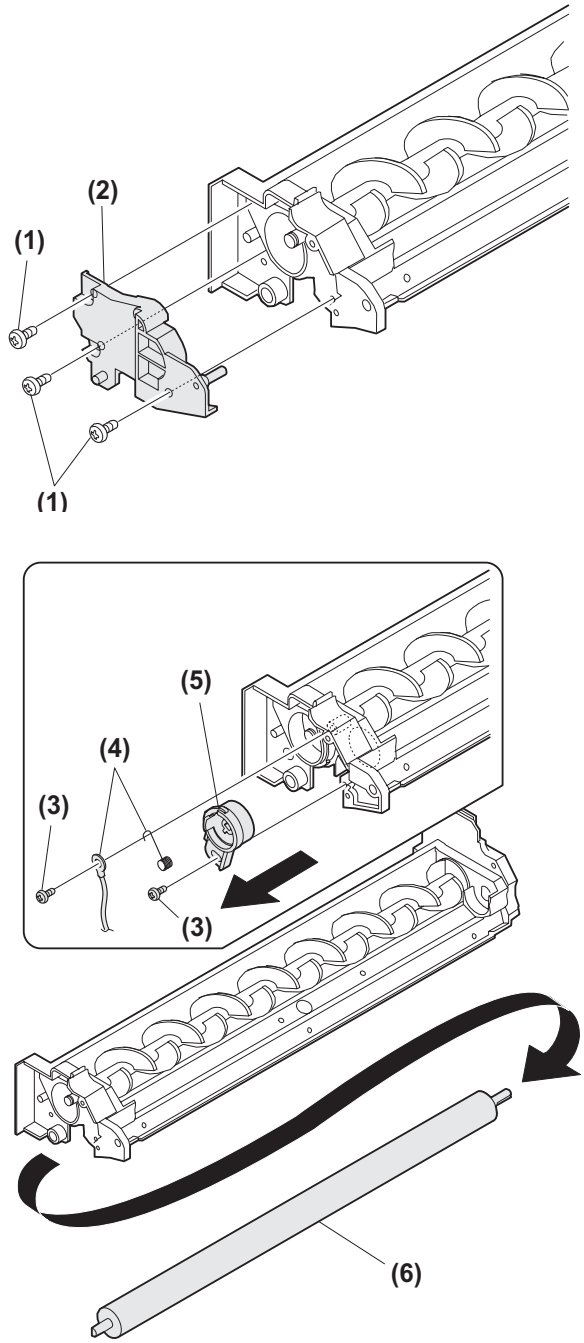

Adjustment: MG roller main pole position adjustment

12. Process section

No.	Contents
A	Drum unit
B	MC holder unit
C	Cleaning blade

A. Drum unit

Assembly: When installing the drum cover (1), be sure to engage the transport screw gear (A) rib and the detection gear (B).

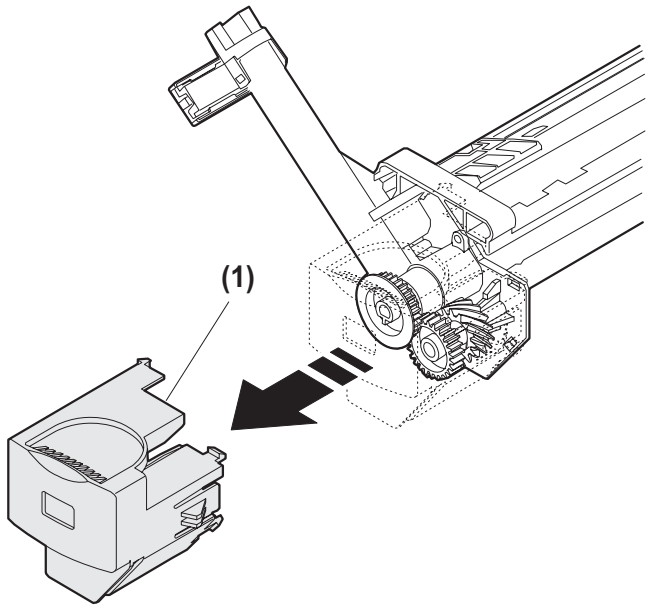

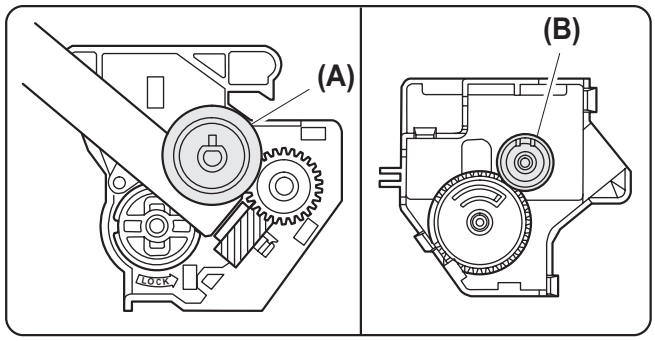

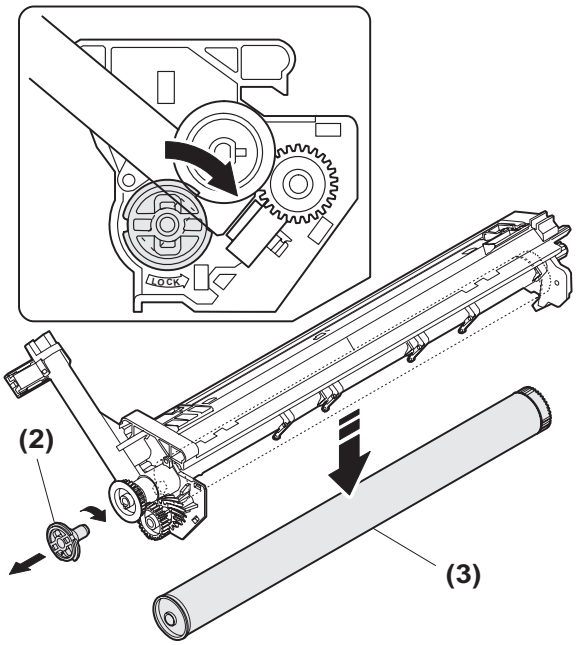

B. MC holder unit

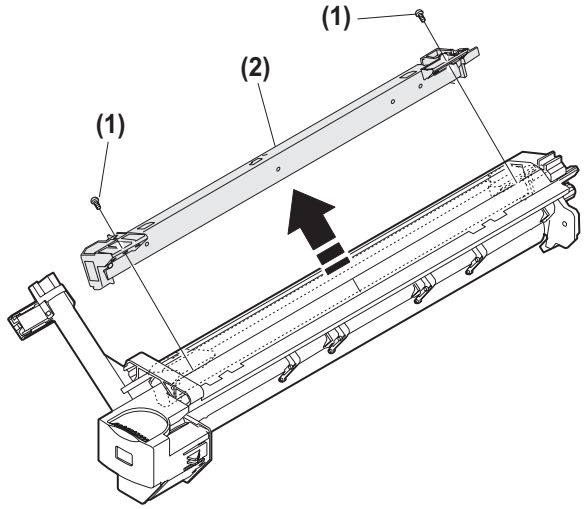

C. Cleaning blade

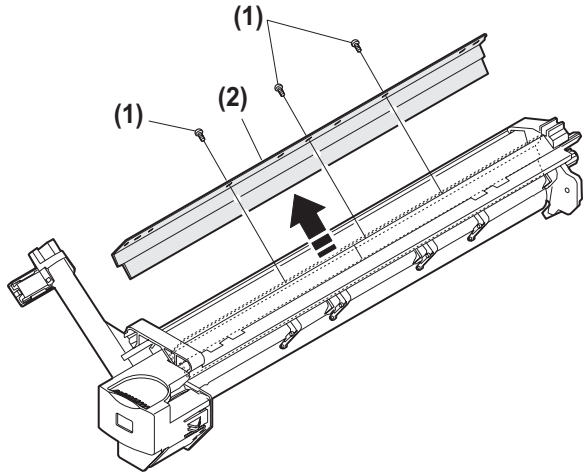

[12] FLASH ROM VERSION UP PROCEDURE

1. MCU/E-SORT

A. Tool

- Machine
- PC
  Operates on Windows 95/98.
- Level converter (UKOG-0002QSZZ) (with serial cable)
- Level converter (UKOG-0003QSZZ) (without serial cable)
- (Serial cable)

B. Procedures

1) Connect the PC and the level converter, and start Windows.
2) Turn off the power of the machine.
3) Remove the cap at the rear of the machine.

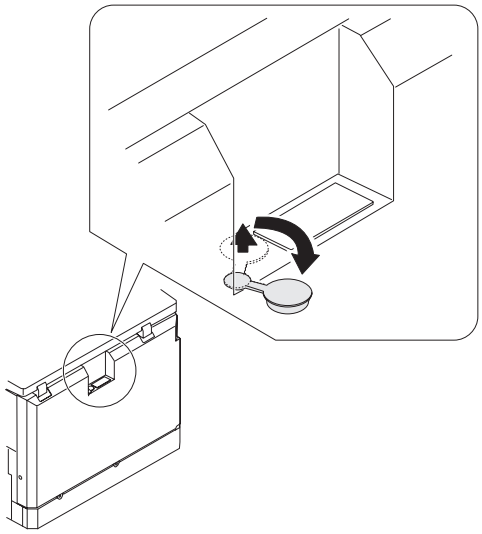

4) Connect the serial connector.

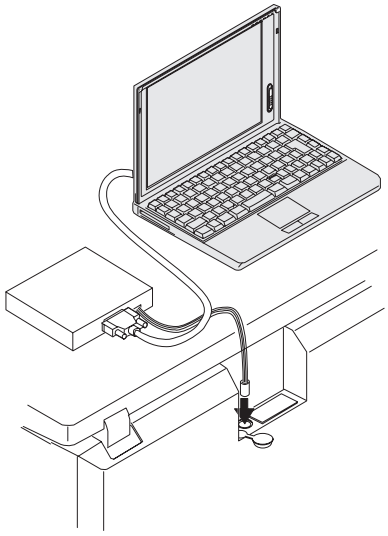

5) Turn on the power of the machine.
   - The machine enters the download mode. (All LED lamps are turned off. The machine accepts no key operations.)
6) Execute “mainte-Vxxx.exe” on the PC.

mainte_v104

∗ Use “mainte_vxxx.exe” ver.1.04 or later.

7) Communication port/communication speed setting
   - Select “Comport” in the option menu, and select the most suitable item with consideration of PC environment, work time, etc.

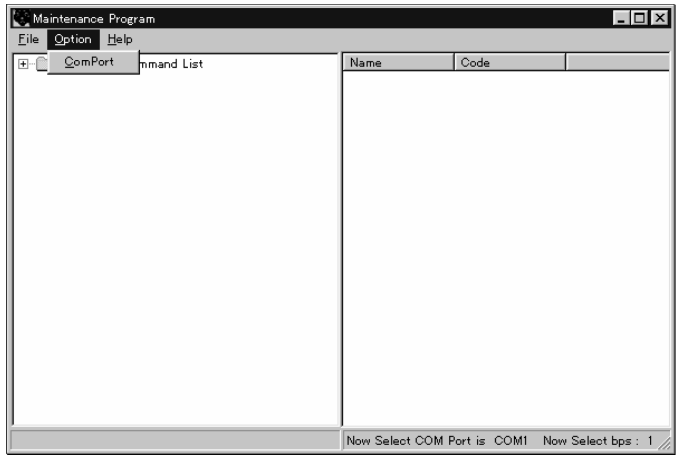

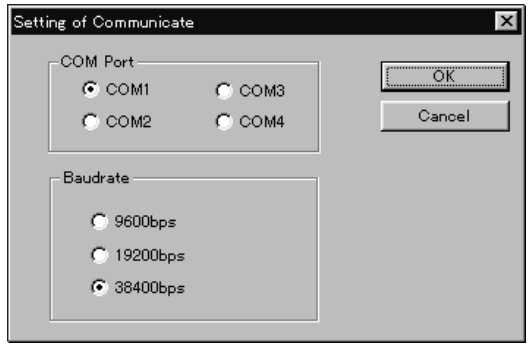

8) Select “Download the Program Data” in the SPECIAL folder, and transfer data.

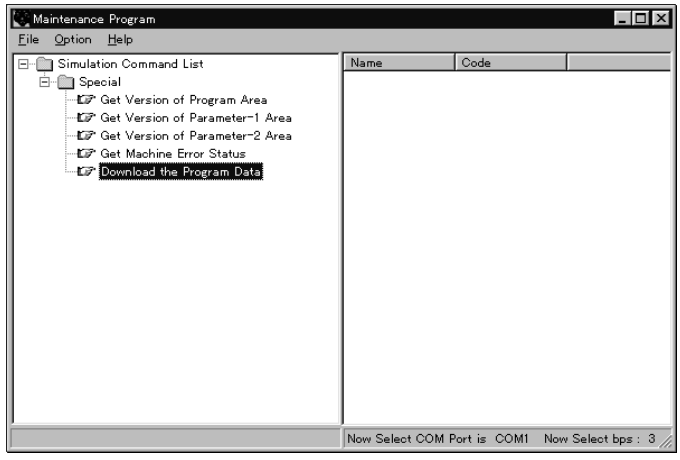

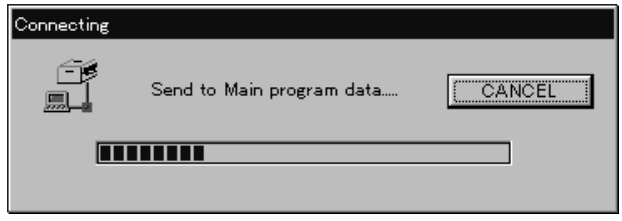

9) Select the data for MCU to be transferred.

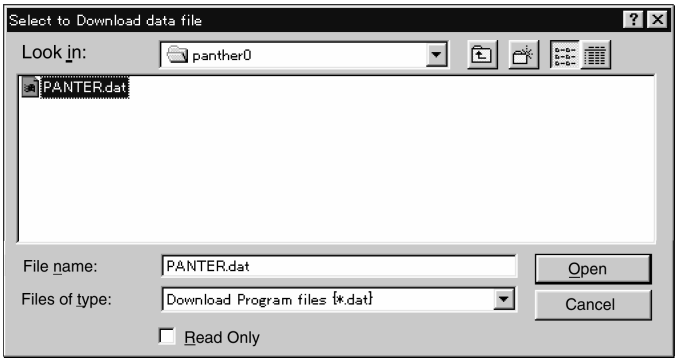

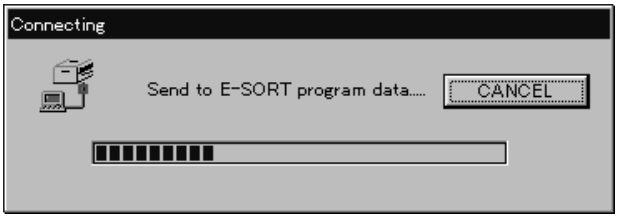

10) Select the data for the electronic sort board to be transferred.
 ∗ When the electronic sort board is not installed, this procedure is automatically canceled. Go to procedure 11).

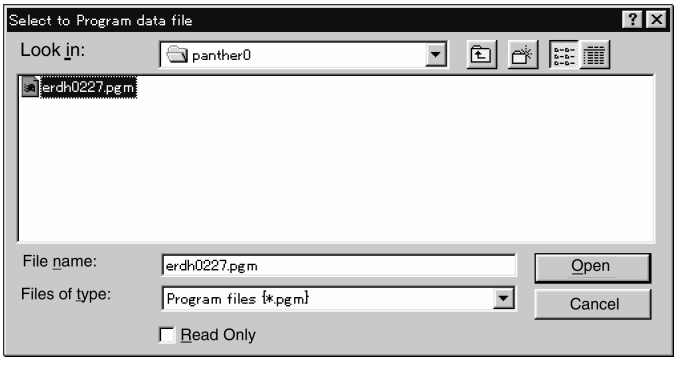

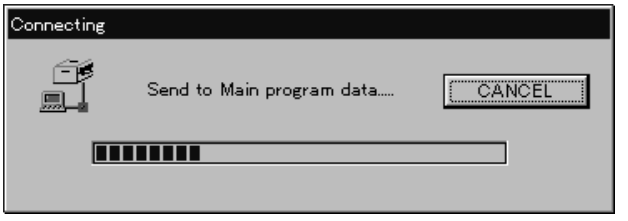

11) After transfer of data, turn off the machine and disconnect the connector.

Reference: If the power is turned off during the procedure or in case of a communication error, resume the procedure from 2).

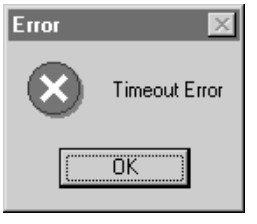

2. PRINTER CONTROL PWB FIRMWARE VERSION UP <With an option installed>

A. Cases where flash memory rewriting is required

In the following cases, the program in the printer control PWB flash memory must be rewritten.

1) When a bug or other error is found
2) Data stored in the flash memory is destroyed or deleted.
3) When the flash memory is replaced.

B. Necessary tools

1) Computer (PC) <Operates on MS-DOS.>
2) Parallel cable
3) Program data file (xxx.BIN)

C. Procedure

1) Print the configuration list to check the firmware version.
 Use the operation panel of the copier to perform the following procedure.
 ONLINE <off line> → MENU <Test Printing Menu> → ITEM <Configuration Page> → ENTER <The test page prints>
2) Connect the PC and the copier with the parallel cable.
3) Turn on the power
4) Execute SIM 67-14.
 “Erase Flash Data?” is displayed on the LCD.
5) Press the ENTER key on the copier’s operation panel.
 “Now Erasing” is displayed on the LCD.
6) After deletion of data, “Please Send Data” is displayed on the LCD and the machine enters the ready state for data input.
7) Download the program file.

(Note) Never turn off the power during download.
 Set the PC to DOS mode → Check that the display shows READY. → Then type COPY ␣/B ␣xxx.BIN LPT1:
 and press the enter key.
 (␣ : space)

8) The machine enters the data reception mode.
 While “Writing” is displayed on the LCD, data are written into the flash ROM.
9) When data reception and data writing into the flash ROM are completed, the SUM check is automatically performed.

(Note) In case of an error, “Sum check Error” is displayed.
 Turn off the power once, and repeat the procedures from 3).

10) If there is no problem on the result of the SUM check, “Complete” is displayed on the LCD.
11) Turn off/on the power to print the configuration page with the above procedures, and check the firmware version.
12) Perform printing on the PC side and check that printing is performed normally.

[13] ELECTRICAL SECTION

1. BLOCK DIAGRAM

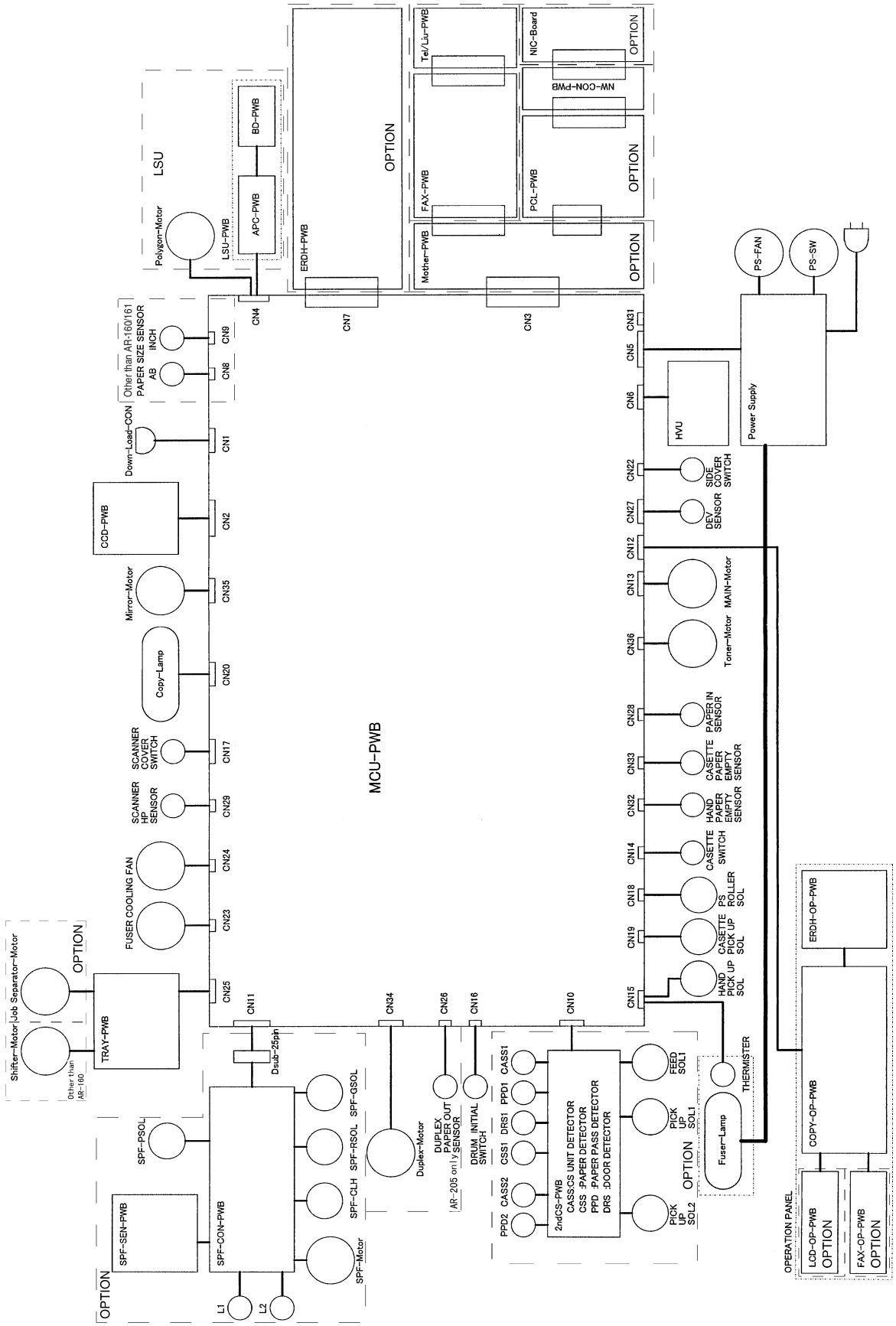

2. ACTUAL WIRING DIAGRAM

ACTUAL WIRING DIAGRAM 1/3

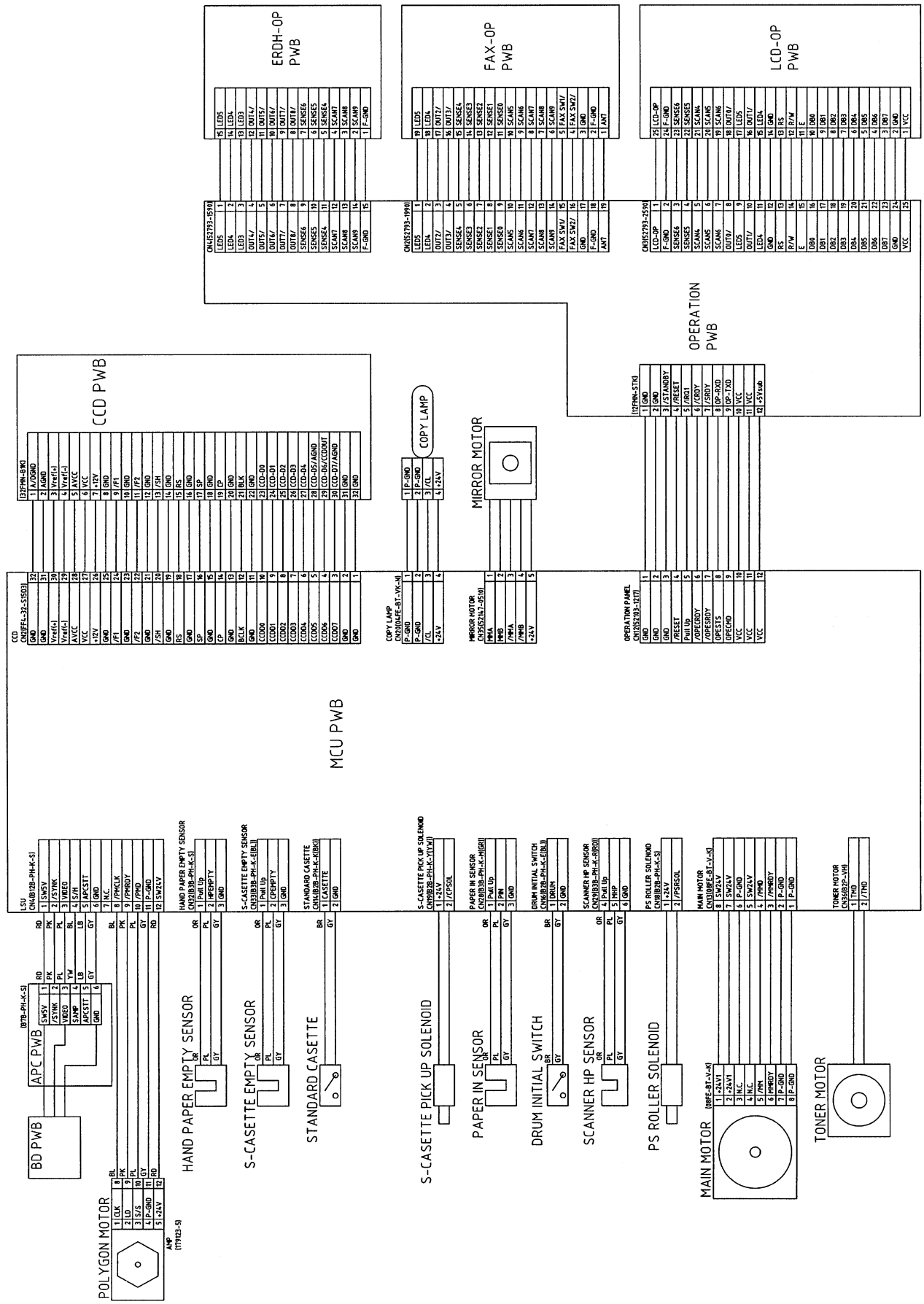

ACTUAL WIRING DIAGRAM 2/3

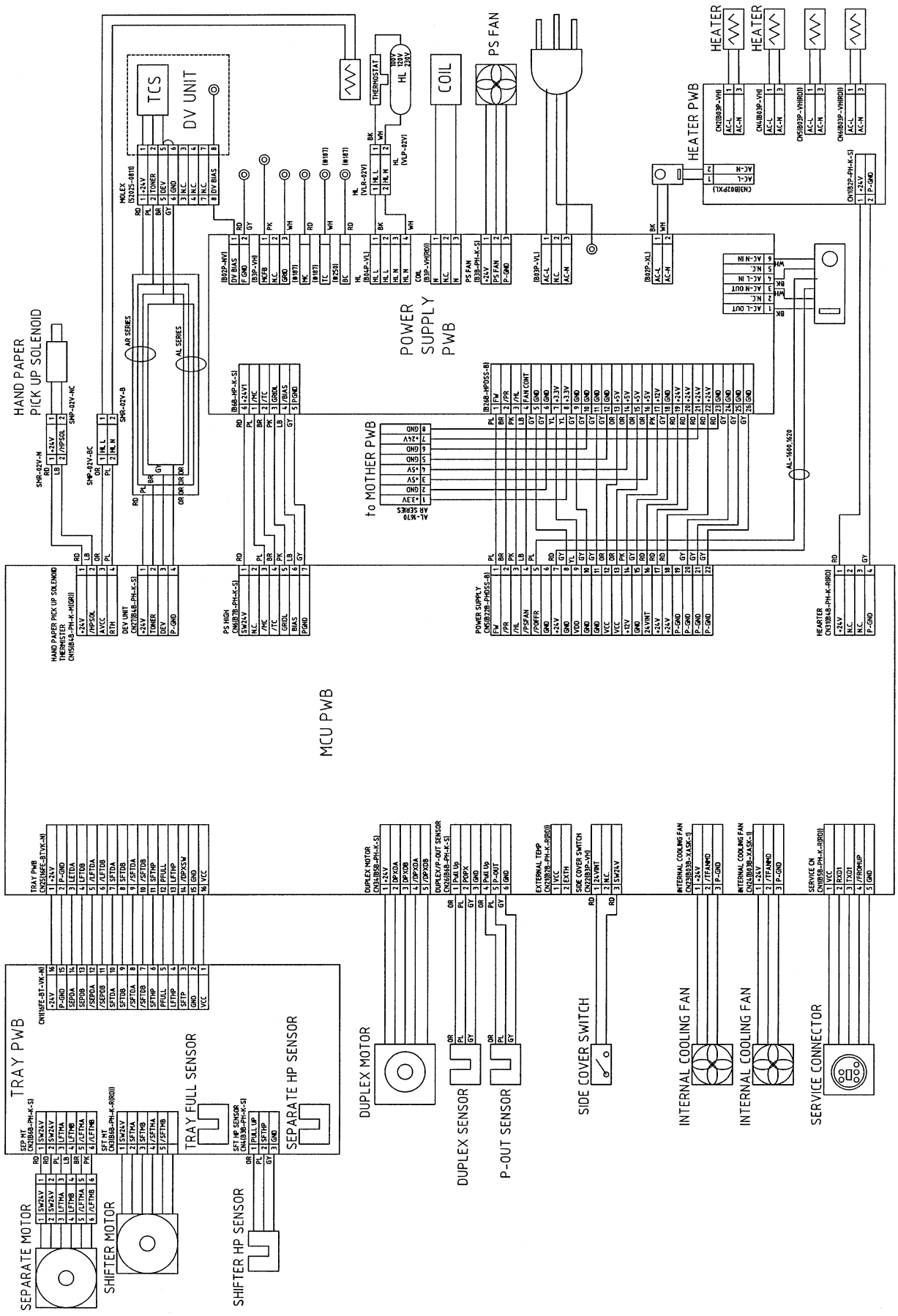

ACTUAL WIRING DIAGRAM 3/3

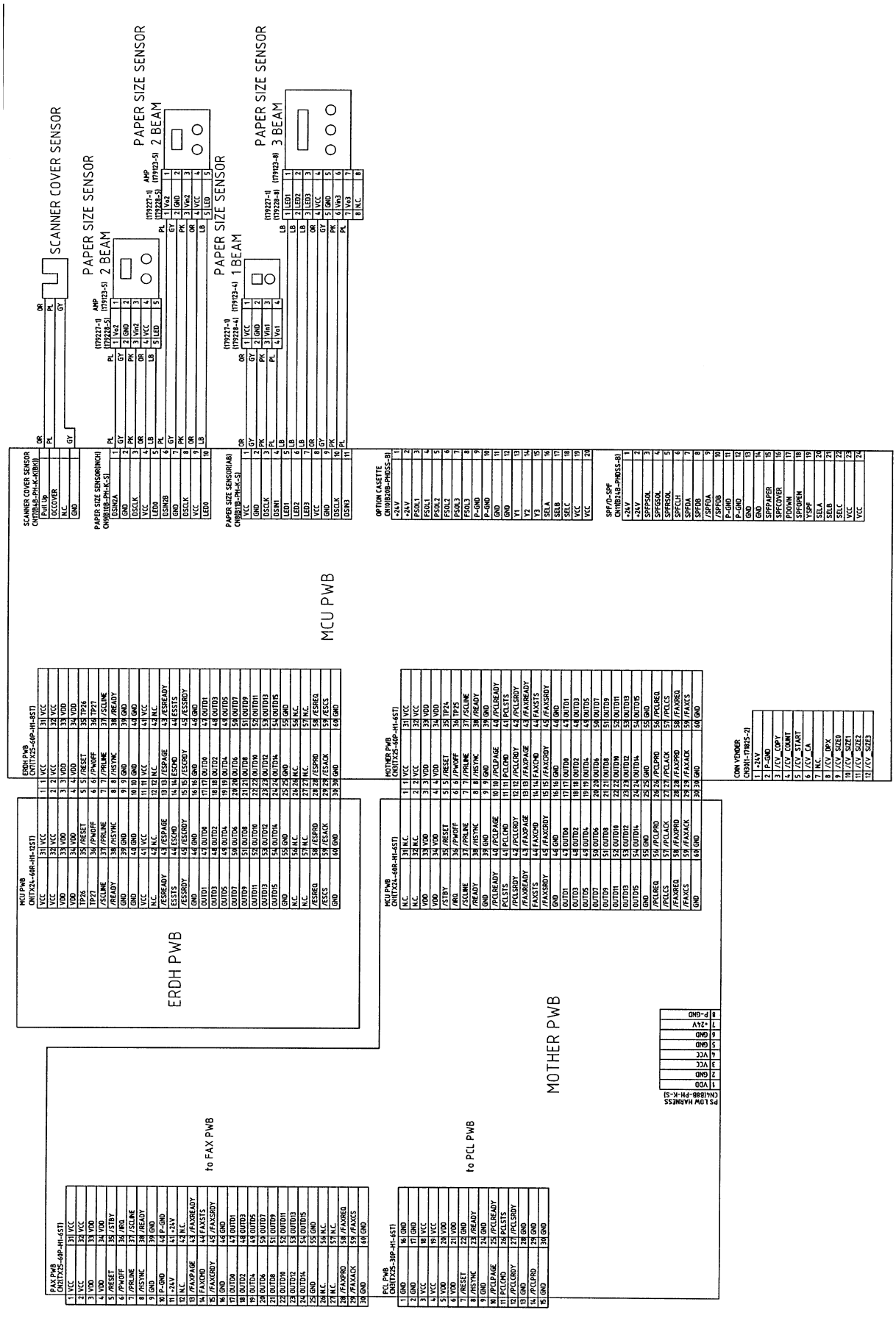

SHARP

COPYRIGHT © 1999 BY SHARP CORPORATION
All rights reserved.
Printed in Japan.
No part of this publication may be reproduced,
stored in a retrieval system, or transmitted,
in any form or by any means,
electronic, mechanical, photocopying, recording, or otherwise,
without prior written permission of the publisher.

SHARP CORPORATION
Digital Document Systems Group
Quality & Reliability Control Center
Yamatokoriyama, Nara 639-1186, Japan
1999 June Printed in Japan Ⓝ